Johnstown Plaza

DESIGN HANDBOOK

JOHNSTOWN PLAZA

SECTION 1— INTRODUCTION

1.1 Purpose & Intent of Guidelines
1.2 The Vision
1.3 Design Review Committee & Procedures for Approvals
1.4 Proposed Land Use
1.5 Relationship to Other Documents

SECTION 2 — OVERALL DESIGN ELEMENTS

2.1 Image Framework Plan
2.2 2534 Signage System
.1 Primary Entry Sign
.2 Secondary Entry Sign
2.3 Streetscape Design
.1 Entries
.2 US 34
.3 Arterials and Collectors
.4 Public Landscape Guidelines
2.4 Parks, Open Space, Regional Detention and Natural Areas

SECTION 3 — GENERAL DESIGN GUIDELINES

3.1 Applicability
3.2 Site Planning & Design
.1 Site Design, Building Placement & Orientation
.2 Storm Drainage
.3 Utilities, Easements & ROW
.4 Grading
.5 Existing Vegetation Preservation
.6. Screening: Large Truck Parking & Service Areas
3.3 Pedestrian, Bicycle and Other Non-motorized Circulation
.1 Walkway Design Criteria
.2 Bike Lanes
.3 Recreational Paths & Trails
3.4 Vehicular Access & Circulation
.1 Roundabouts
.2 Emergency Access
.3 Sight Triangles
.4 Bus Stops
.5 Drive-Thru Facilities
.6 Access Between Adjacent Parcels
3.5 Parking
.1 Parking Lot Design
.2 Perimeter Landscape Requirments
.3 Interior Landscaping Requirements
.4 Interim Parking Lots
.5 Bicycle Parking
3.6 Landscaping
.1 Landscape Design Principles
.2 Landscape Performance Stds
.3 Irrigation Systems
.4 Soil Amendments
.5 Plant Selection & Diversity
.6 Landscape Maintenance
3.7 Site Development Signage
.1 Purpose
.2 Prohibited Signs
.3 Sign Area Measurement
.4 Freestanding Signs
.5 Convenience Store Signs
.6 Awnings
.7 Regulatory Signs
3.8 Site Furnishings
.1 Site Furniture
.2 Art
.3 Fencing & Walls
3.9 Lighting

SECTION 4 — RETAIL USES

4.1 Retail Uses Introduction
.1 Retail Team Directory
.2 Overall Site Plan
.3 Addresses Diagram
4.2 Retail Building Design
.2 Materials Palette
.3 Building A Elevations
.4 Building B Elevations
.5 Building E1 Elevations
.6 Building E2 Elevations
.7 Building F Elevations
4.3 Retail Tenant Sign Criteria
.2 Intro & Descriptions
.3 Sign Types & Parameters
.6 General Parameters
.8 Signs Not Permitted
.8 Additional Signage
.9 Environmental Graphics
.10 Directional Signage
.11 Signage Size Key Map
4.4 Retail Area Hardscape Design
.2 Site Furnishings
.3 Site Lighting
.4 Tower Sign
.5 Monument Signs
.6 Site Amenities Masterplan
.7 Sculpture Location Map
.8 Central Roundabout—Plan
.9 Central Roundabout– Elevation
.10 North Kiosk-Elevation
.11 Terminus Court / Sitting—Plans
.12 South Gateway—Plan
.13 South Gateway—Elevation

SECTION 1 — INTRODUCTION:

1.1 Purpose and Intent of the Guidelines

1.2 The Vision

1.3 Design Review committee and Procedures for Approvals

1.4 Proposed Land Use

1.5 Relationship to Other Documents

1.0 Introduction

1.1 Purpose and Intent of the Guidelines

Johnstown Plaza is a commercial shopping center located in the southeast quadrant of the I-25 and US 34 intersection. In the growing Northern Colorado area, it is important to provide design guidelines that maintain the unique character and principles of the development and reflect the importance of the larger regional context. The purpose of the overall development guidelines is to provide a manual to ensure that the character of Johnstown Plaza is maintained throughout the development and provide instruction on acceptable site planning, circulation, streetscapes, parking, open space, landscaping, signage, site furnishings and lighting.

The design guidelines should be utilized by residents, developers, designers, architects, engineers, and planners to find design, construction, and maintenance information for the shopping center. Section 1 contains the vision, site opportunities and constraints, proposed land use plan and information regarding submittal information for design review by the Johnstown Plaza Design Review Committee (JPDRC) and the Town of Johnstown (JRC). Community-wide design elements that convey the character of Johnstown Plaza are located in Section 2. The General Design Guidelines (Section 3) apply to all development and specific types of development requirements are located in Section 4. Civic uses should follow the guidelines for the areas in which they are located, and will be reviewed on a case by case basis. Definitions can be found in the last section.

The Design Guideline sections are as follows:

1. Introduction
2. Shopping Center-Wide Design Elements
3. General Design Guidelines for Development
4. Guidelines Specific to Retail Use
5. Definitions

The WRFG Annexation Agreement, Preliminary and Final Development Plans (GDP's), preliminary and final plats and other development entitlement documents for Johnstown Plaza have been approved, or require approval by the Town of Johnstown. These documents should be reviewed specifically for each development.

In addition, all developments within Johnstown Plaza are subject to the performance standards and guidelines that are

contained in this document. In cases where this document or the approved development entitlement document for a given property is silent, the Town of Johnstown standards and regulations, at the time in which the Design Guidelines are adopted, shall apply. In the case of conflicting requirements, these design guidelines shall govern. All guidelines and standards are subject to the reasonable discretion of the JPDRC and JRC, which shall make a final determination in good faith.

The provisions of these Guidelines shall supersede any conflicting provision of the Johnstown Municipal Code and may only be modified to protect the health, safety, and welfare of the general public by the Town Council following at least thirty (30) days written notice to the record owner of any real property effected by the modification.

1.3 Design Review Committee and Procedures for Submittals and Approvals for Development Projects

The property comprising Johnstown Plaza was annexed to the Town in 2000 and is subject to the terms and conditions of the WFRG Annexation Agreement dated December 18, 2000. As part of that Annexation Agreement (Section 35 (h)), Johnstown and the Property Owners agree to develop and agree to performance standards for the purpose of addressing design considerations including architectural, site planning, landscaping, streetscape and sign elements for land uses within Johnstown Plaza. Johnstown Plaza Design Guidelines are the performance standards as contemplated in the WFRG Annexation Agreement.

The following outlines the successive processes for submittals and approvals for development projects. Projects must first be submitted to the Johnstown Plaza Design Review Committee (JPDRC) before submitting to the Johnstown Review Committee (JRC). After approval is gained by both the JPDRC and the JRC, the project may be submitted for building permit application.

1.3.1 Johnstown Plaza Design Review Committee (JPDRC)

The purpose of the JPDRC is to ensure proposed developments meet the standards as established in the Design Guidelines in order to maintain a consistency of planning and design for the entire project. The Johnstown Plaza Design Guidelines legally apply to all land that is part of Johnstown Plaza, regardless of ownership, and are in addition to the zoning and land use regulations of local government. The Design Guidelines and supporting documents are administered and enforced by the JPDRC, which shall consist of the Johnstown Plaza, LLC members and the Carson Development, Inc. members and at least one engineer and one Architect/Landscape

Architect/Planner.

1.3.2 JPDRC Approval Process

Any proposal to construct, modify or demolish improvements within Johnstown Plaza must have plan approval from the JPDRC prior to commencement, and following JPDRC approval must also receive administrative approval, in accordance with these design guidelines, from the Town of Johnstown Town Planner. Subject to Town approval, the JPDRC's review and approval process also applies to signage, changes in property use, and maintenance activities that take place on, or with respect, to property that is part of Johnstown Plaza. After the JPDRC approves a plan submittal, an applicant may proceed with a project, but only in strict compliance with the terms and conditions of approval. The JPDRC may perform periodic site inspections, both during development and on an ongoing basis thereafter to ensure compliance.

The JPDRC meets through appointment only, and projects are placed on a formal meeting agenda only after applications have been submitted at least two weeks prior to a meeting. Formal presentations to the JPDRC are mandatory for most development projects, however, most details are reviewed through informal meetings with the JPDRC representatives. This process is designed to expedite the preparation and approval of the plans for any specific site where development is contemplated. There are three phases in the development approval process.

These include:

1. Pre-design Conference
2. Design Development (includes plans and elevations)
3. Final submittal

Approval is contingent upon the submittal of materials and payment of any designated fees or expenses, and favorable review. A "Notice of Committee Action" letter from the JPDRC will be sent to each applicant within a maximum of thirty (30) days after the date of the submittal. This notice will state whether approval or disapproval has been granted and outline any conditions associated with the ruling.

Review fees may be required for all JPDRC submittals and shall be paid for the phase scheduled for review on or before said review. If the JPDRC requires that the applicant attend additional meetings with a JPDRC member or consultants due to incomplete, inadequate or improper submittals, then the applicant shall be responsible for paying the full costs of such services. No written confirmation of a JPDRC action will be issued until all appropriate fees have been paid. A current schedule of fees is contained in the submittal procedures packet.

1.3.3 Johnstown Review Committee (JRC)

The Town's Design Review Committee will be composed of the following persons: Town Manager and Town Planner. The Design Review Committee may seek the assistance of any other Town employee or consultant whose expertise is necessary to review the application. All Town subdivision and re-subdivision requirements, building codes, permits and fees, as adopted by the Town, do apply.

1.3.4 JRC Approval Process

All individual development projects in Johnstown Plaza shall be reviewed and approved by the Town pursuant to this approval process. This approval process shall supersede and replace all other approval processes for land use developments set forth in the Town of Johnstown's Zoning Code, Comprehensive Plan and any other applicable Municipal Ordinance provisions.

A. Pre-Application

The applicant shall schedule a pre-application conference with the Town Planner prior to submittal of any project proposal. The intent of this initial meeting shall be as follows:

1. To informally discuss the overall context and development objectives for the proposed project.
2. To review how the project has interpreted the guidelines and criteria for development of the project as set forth in the Design Guidelines.
3. To review a sketch plan and architectural design concepts prepared by the applicant which illustrates overall site development and major site development components. The sketch plan is intended to be a very preliminary sketch of the development concept and not a formal site plan.

B. Final Development Plan Submittal and Process

All development projects shall be submitted in compliance with the current Town Community Development Application Form. Accompanying the application shall be all required fees as well as a certification from the Johnstown Plaza JPDRC stating that the development as proposed in the application meets all the applicable standards and guidelines of the Johnstown Plaza Design Guidelines. The application shall be reviewed for completeness within seven (7) working days of filing. If the Town determines that the application is complete, the application shall then be reviewed by the JRC. If the Town determines that the application is incomplete, the Town shall specify in writing the specific ways in which the application is insufficient or incomplete.

The JRC shall review the application for conformance with all of the applicable terms and conditions of the Johnstown Plaza Design Guidelines. Said review shall be completed within 45 calendar days of Town determination of completeness of the

application. Said 45 day period may be extended in writing by the applicant. Review of the application by the JRC is administrative in nature for the purpose of determining that the proposed development as set forth in the application complies with the terms and conditions of the Johnstown Plaza Design Guidelines.

The JRC has the right to grant variances to the Johnstown Plaza Design Guidelines based upon the applicant's ability to demonstrate innovative approaches to design solutions, or future market conditions which the Committee feels is advantageous to, and in conformity with, the intent of the Johnstown Plaza Guidelines, only if the JRC has the written approval of the JPDRC to grant the variance sought.

C. JRC Approval

The JRC shall approve the application if it complies with the applicable terms and conditions of the Johnstown Plaza Design Guidelines. The JRC may approve the application with conditions. Said conditions shall be specifically related to compliance with standards and guidelines in the Johnstown Plaza Design Guidelines. In the event the JRC determines that the proposed development in the application does not comply with the Design Guidelines, the JRC shall specify in writing the specific reasons in which the application does not meet the applicable criteria.

D. JRC Appeals

The decision of the JRC may be appealed by the applicant to the Johnstown Town Council. The appeal shall be in writing, and shall be made within thirty (30) days of the of the date of the transmittal of the JRC's decision. The Johnstown Town Council shall hear the appeal within thirty (30) days of the filing of the appeal by the applicant. The decision of the Johnstown Town Council on the appeal shall be final.

1.3.5 Additional Criteria & Updates

In addition to the criteria herein, the JPDRC and JRC may promulgate additional criteria that are not inconsistent with the criteria set forth herein. From time to time, any of these additional criteria may be amended by action of the JPDRC and JRC. Changes in land use or changes greater than the 20 percent dimensional criteria, that shall become a permanent part of the design guideline document, shall constitute a major change and shall be brought back to the Planning Commission and Town Council for review and approval.

1.3.6 Variances

The JPDRC may authorize variance from these criteria when circumstances such as topography, natural obstructions, hardship, or aesthetic or environmental objectives or considerations may warrant, insofar as they are not superseded by applicable Town of Johnstown zoning regulations. Such variances must be approved by the JPDRC and JRC. A variation of up to 20 percent in

dimensional standard is allowed if it improves the project design or an unreasonable hardship can be demonstrated.

1.3.7 Final Plan Amendments

Amendments to final plans must be approved by the JPDRC and JRC.

1.4 Proposed Land Use

The proposed land use plan illustrates areas for development by breaking them down into categories. Categories may include more than one use; however, each use shall follow the general design guidelines as established in the following two sections, as well as the guidelines for specific uses established in Section 4.

The land uses recorded on the following pages show the general intent within each land use category. The lists contain specific examples for guidance purposed, but not by way of limitation.

1.4.1 Retail Principal Uses

- Retail stores including, but not limited to, food stores, delicatessen, bakery goods store, liquor store, hardware store, drugstore, regional department stores, specialty shops, etc.
- Customer service establishments including, but not limited to, barber and beauty shops, restaurant and bar, shoe repair shop, coin-operated laundromat and dry cleaning establishment, fine art studio, etc.
- Banks and financial institutions
- Medical and dental clinics and other health care
- Commercial lodging
- Theater
- Minor repair, rental and servicing establishments
- Passenger transportation terminals
- Convenience/gasoline service stations
- Retail sales of furniture, fixtures, equipment, home supplies and hardware

1.4.2 Retail Permitted Accessory Uses

- Garages for storage of vehicles used in conjunction with the operation of business
- Off-street parking and loading areas
- Signs
- Commercial parking facilities

1.4.3 Office Principal Uses

- Business and professional offices
- Banks and financial institutions
- Medical and dental clinics and other health care
- Public administrative offices and service buildings
- Public utility offices and installations
- Public Library
- Private club or lodge
- Commercial lodging
- Passenger transportation terminals

1.4.4 Office Permitted Accessory Uses

- Garages for storage of vehicles used in conjunction with the operation of business
- Off-street parking and loading areas
- Signs
- Any other structure or use clearly incidental to and commonly associated with the operation of a principal use permitted by right
- Commercial parking facilities.

1.5 Relationship to Other Documents

The Design Guidelines establish the guiding principles for review and processing of each development. There are other documents that were used as reference for the Design Guidelines or may be referred to for information not found within the Design Guidelines. The version currently in effect when the Design Guidelines were adopted shall apply.

- WRFG Annexation Agreement-December 17, 2000
- Town of Johnstown Zoning Code
- Town of Johnstown Comprehensive Plan- April 1, 2001
- Johnstown/Milliken Parks, Trails, Recreation and Open Space Plan-May 2003
- Town of Johnstown Landscape Standards and Specifications – July 2004
- Johnstown Criteria and Construction Regulations-April 2004
- Johnstown Transportation Plan – February 2008

PROPOSED LAND USE PLAN
for Johnstown Plaza

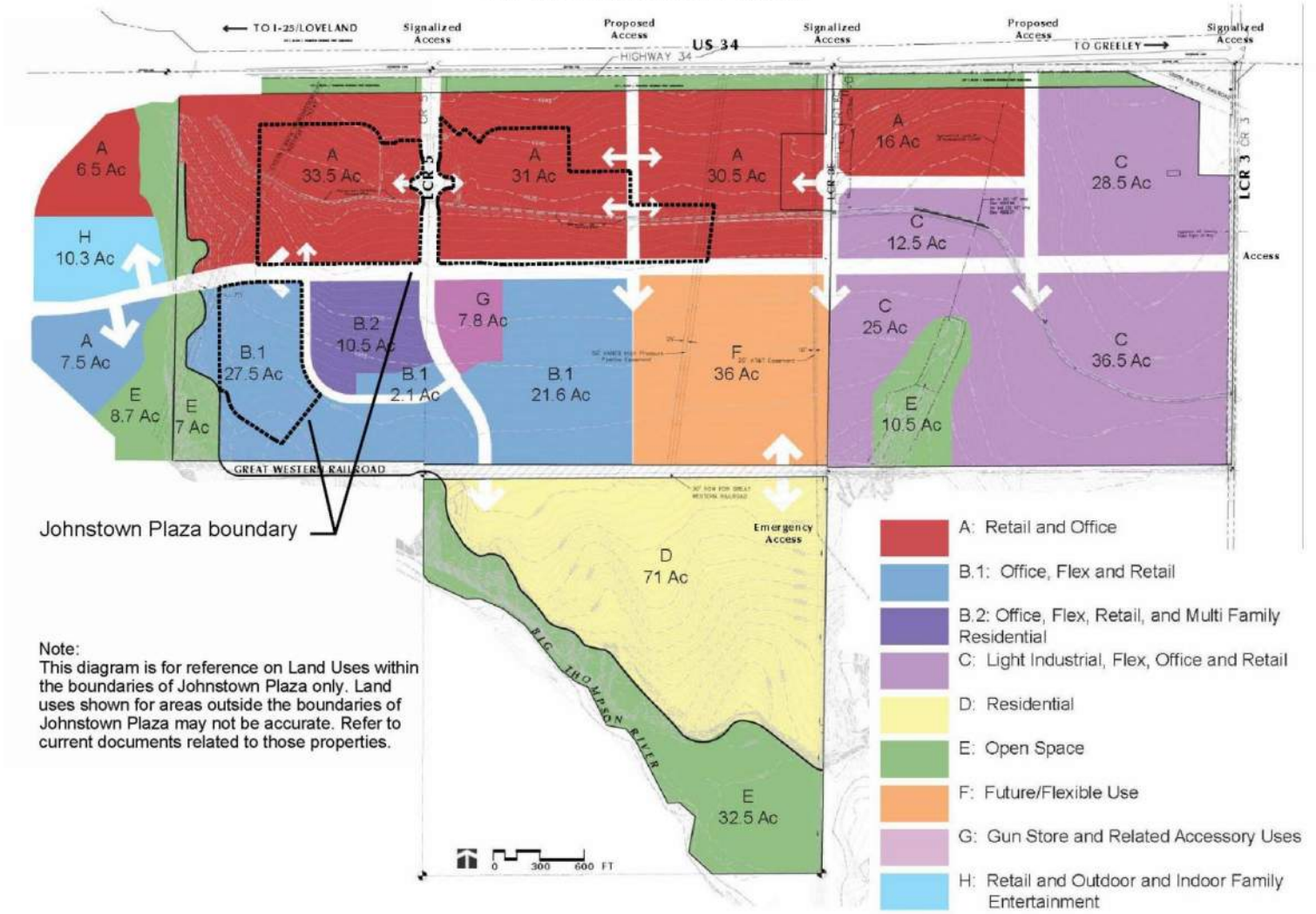

Note:
This diagram is for reference on Land Uses within the boundaries of Johnstown Plaza only. Land uses shown for areas outside the boundaries of Johnstown Plaza may not be accurate. Refer to current documents related to those properties.

SECTION 2 — OVERALL DESIGN ELEMENTS:

2.1 Image Framework Plan

2.2 2534 Signage System

2.3 Streetscape Design

2.4 Parks, Open Space, Regional Detention and Natural Areas

2.0 Overall Design Elements

2.1 Image Framework Plan

The image framework plan illustrates the locations of the community identification elements within the 2534 Development as a whole which Johnstown Plaza operates separately within the 2534 Development. Two primary entrance signs are located along US 34 to create a gateway and emphasize entrances for people going east from I-25 and people driving west along US 34. The secondary entrances will benefit more local traffic and address the minor roadway entrances to the development. Landmark and high-image intersections also help develop the character of the area. These intersections may contain showy landscaping, decorative walls, art and overall exhibit an increased decorative character than other minor intersections. By creating a hierarchy of intersections, people will be able to use the decorative elements as a wayfinding device.

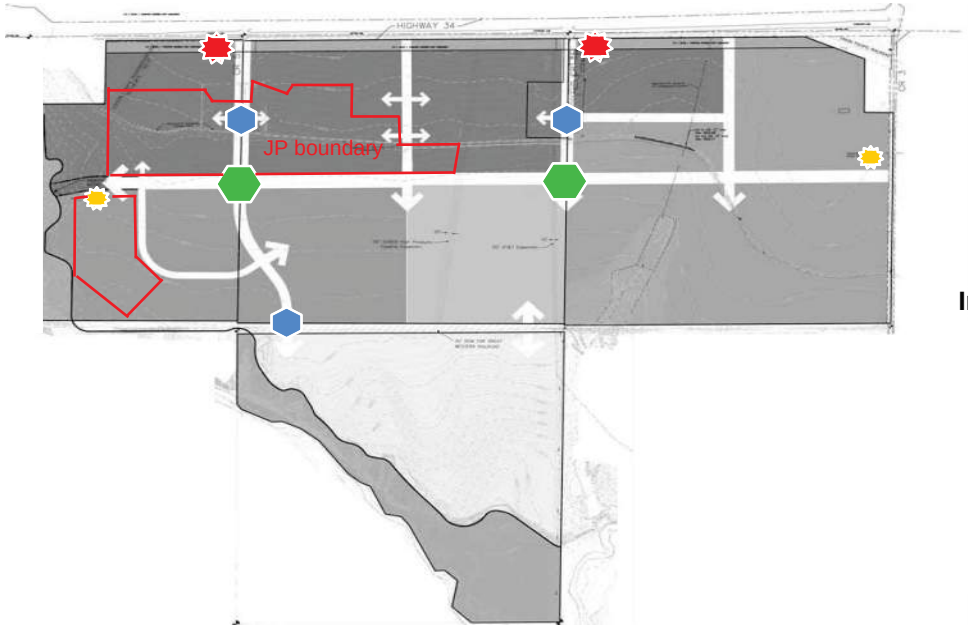

Image Framework Plan

- Primary Entrance with Signage Secondary
- Entrance with Signage
- Landmark Intersections
- High-image Intersections

2.2 Johnstown Plaza Signage System

All community identity signs for Johnstown Plaza will be located in signage and landscape easements and outside of the public ROW. See Image Framework Plan for the location of signage.

2.2.1 Primary Entry sign

Primary entry signs are located at the intersections of CR5 & US 34 and CR 3E & US 34.

2.2.2 Secondary Entry sign

Secondary entry signs will be located at CR 3 & east/west road and where the 1-25 frontage road could potentially enter the Johnstown Plaza and 2534 development.

2.3 Streetscape Design

2.3.1 Entries

Johnstown Plaza entries will contain both signage and landscaping that tie into the overall development streetscape design. The framework plan illustrates the major and minor entries into the site. Because the design of US 34 will be changing in the future, the alignment of entry signs along this highway will be set back from the existing alignment.

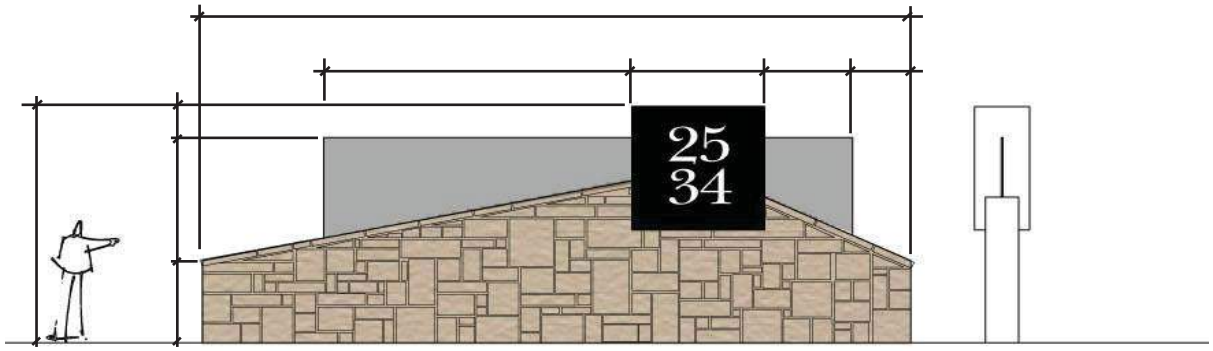

2.3.2 US 34

In order to create an appropriate landscape corridor along US 34 that can be perceived at highway speeds, large masses of trees and shrubs are required. The right-of-way will be primarily drought- tolerant turf. This treatment will transition to bands of shrub/perennial beds and tree groupings that meander from just inside the ROW to the private property and back. The goal is to avoid a straight line treatment at the edge of the ROW.

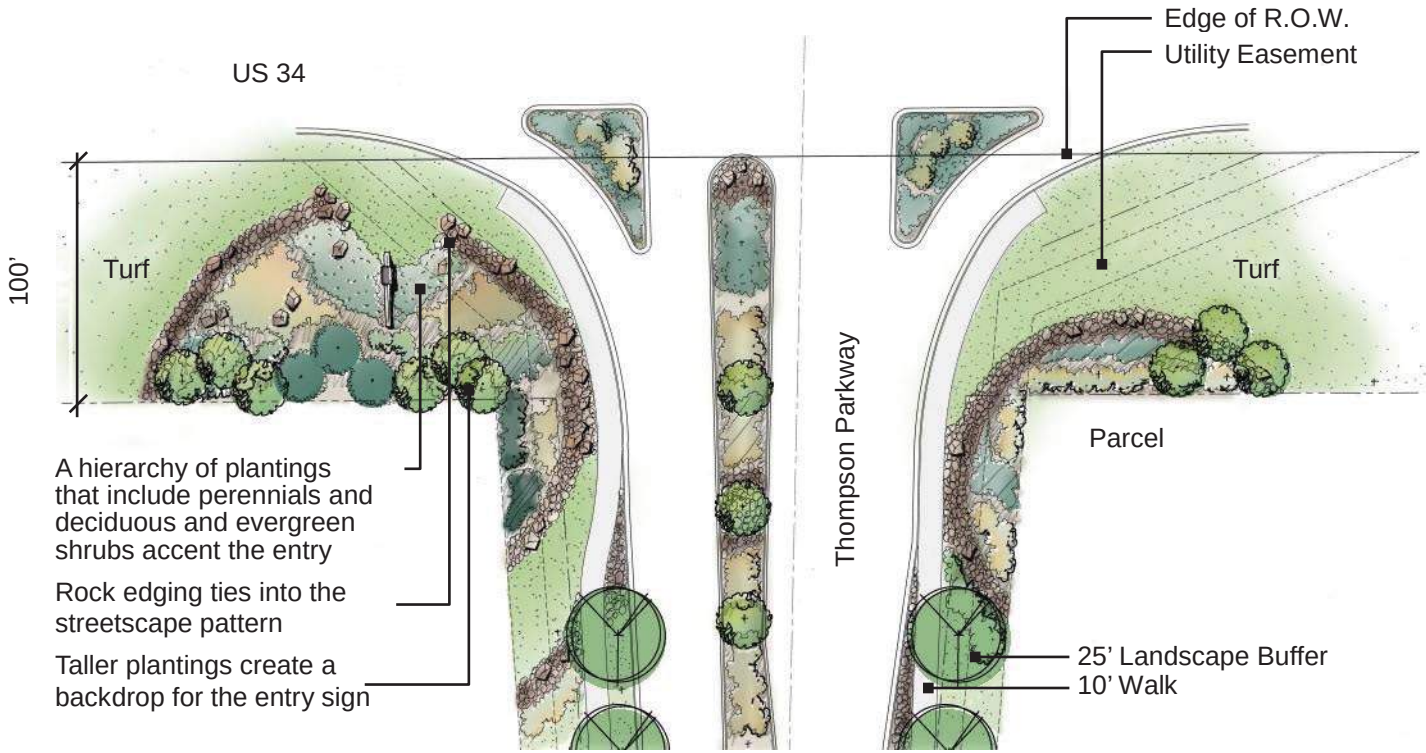

Primary Entry Design

Primary Entry Design Perspective

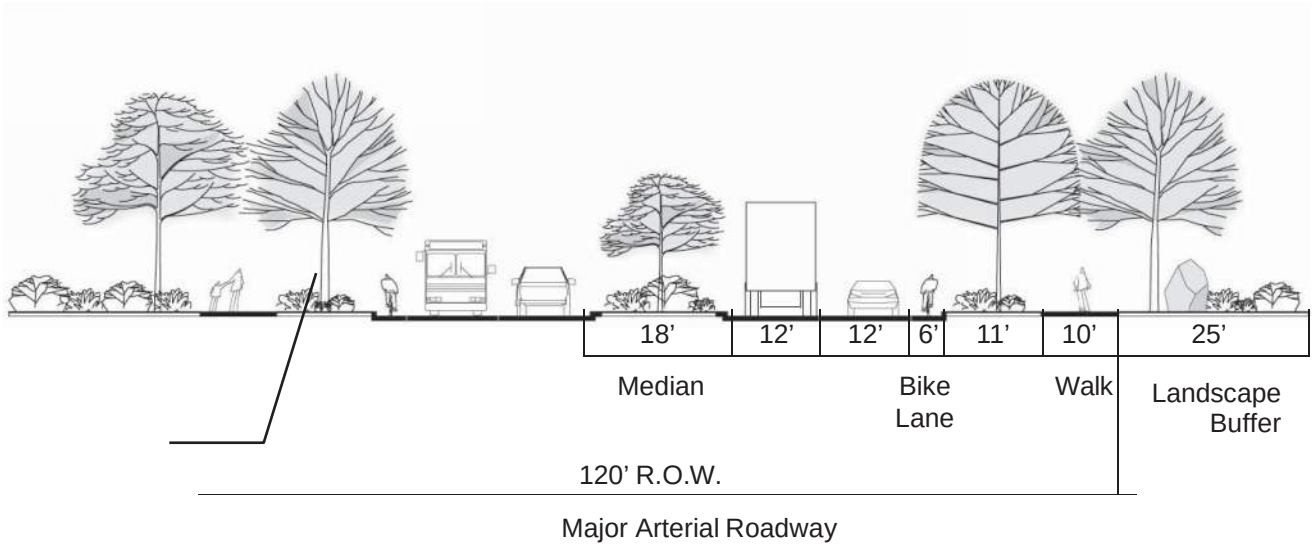

Major Arterial Section

2.3.3 Arterials and Collectors

Due to the size of the development, planting of arterial and collector streets will be treated in a similar fashion in order to create a unified and significant streetscape image. The streetscape design emphasizes xeriscape principles and a unique look that sets Johnstown Plaza apart. A varying mix of deciduous trees will be planted in alternating rows in order to create a pleasant pedestrian experience. Both drought-tolerant turf and stone will be used for the groundcover in order to minimize water usage, reduce maintenance, and provide contrasting textures and colors. Shrubs will be planted in masses within areas to emphasize the streetscape forms, screen cars and provide landscape interest. Occasional boulders located along the streetscape will add visual interest as well as tie sign materials into the streetscape. Medians will be planted in a similar fashion.

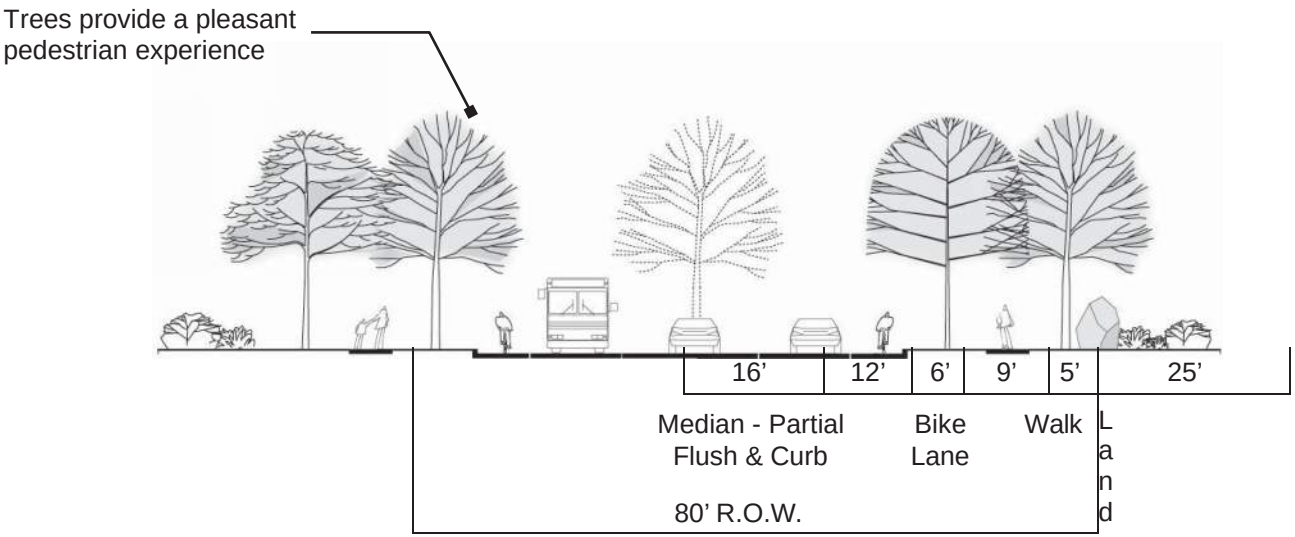

Major Collector Section

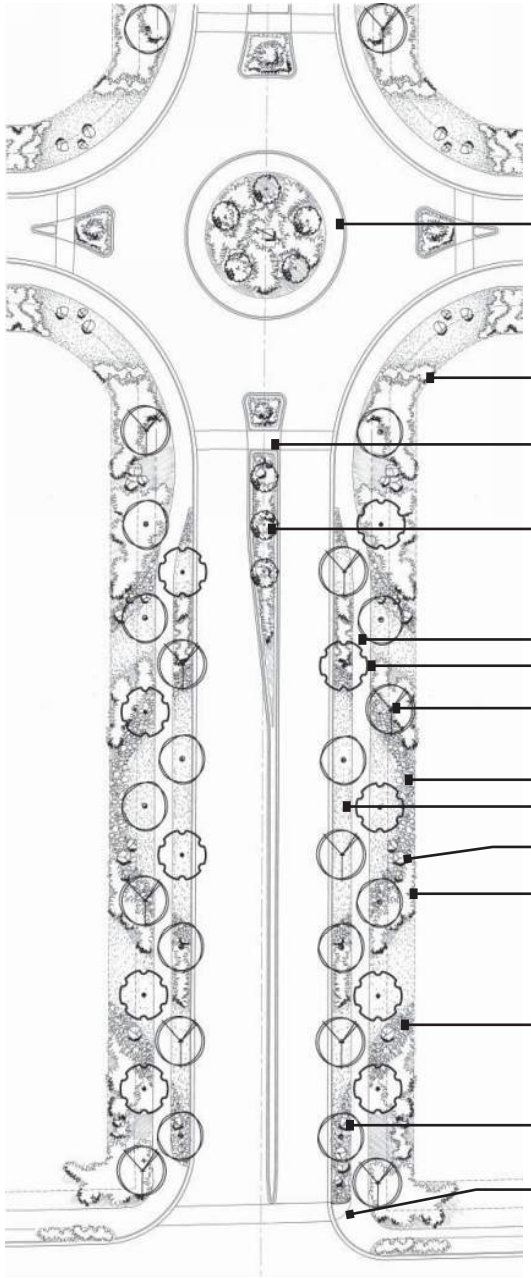

Major Arterial Streetscape

Roundabouts include a 10’ splashplate, plantings and groundcover similar to the streetscape and ornamental trees for accent

Similar end plantings create unified intersections

Medians create a pedestrian refuge for crosswalks

Medians planted with ornamental trees, shrubs and accented with rock mulch

10’ walk

Roadway R.O.W. at back of walk

Trees planted with multiple varieties

Rock mulch pattern

Irrigated Turf

Groupings of boulders add visual interest

Shrub massings emphasize streetscape forms

15’ Utility Easement located at back edge of Landscape Buffer

Fixed obstructions should be a minimum 3’ from face of curb

Walkways, ramps and crosswalks shall follow guidelines established in the Town of Johnstown Design Criteria and Construction Regulations at the time the Design Guidelines were adopted

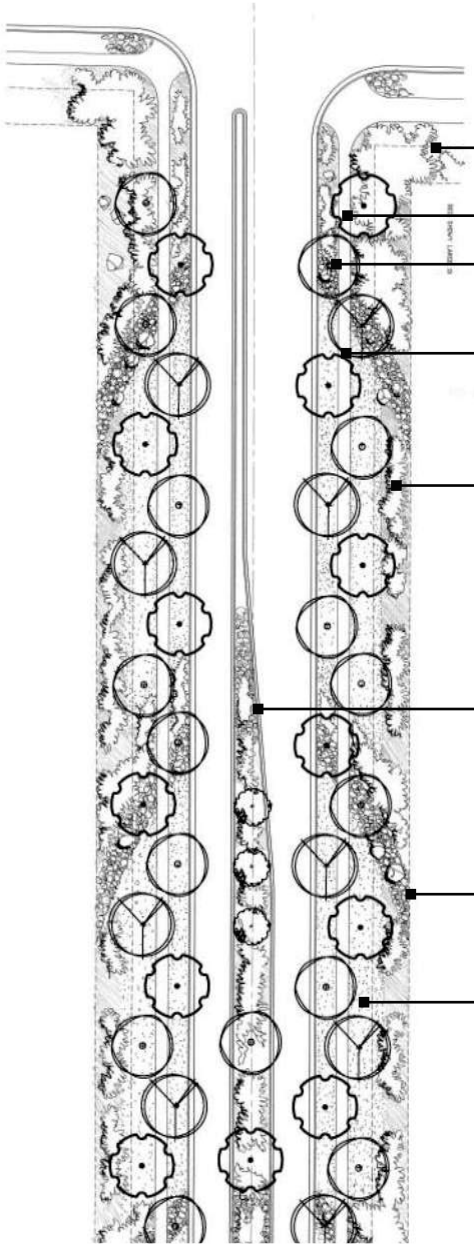

Similar end plantings create unified intersections

5’ walk

Trees planted with multiple varieties

Roadway R.O.W. at back of walk

Shrub massings differ in size and form and locations can vary based on needs of adjacent land uses

Medians, located near intersections, are planted with shade trees, ornamental trees, shrubs and accented with rock mulch

Rock mulch pattern with boulders for visual interest

Repeating irrigated turf panels

M**ajor Collector Streetscape**

2.3.4 Landscape Guidelines for Public Property

- Arterial Rights–of-Way. The developer is responsible for landscaping the entire area from the back of the curb to the property line at the time the adjacent land develops for a specific use. Arterial landscaping is intended to provide an overstory street canopy along arterial streets and a landscaped area between the street and pedestrian areas.
  - The right-of-way will be landscaped with at least one (1) tree for every fifty (50) linear feet of right-of-way and 60% of the landscape areas shall be covered with plant material within five (5) years of installation.
  - Trees will be placed to create a street tree canopy that provides an aesthetic gateway along arterial streets and also functions to cool street pavement.
- Arterial or Expressway Rights-Of-Way that is also a State or Federal Highway. This section is intended to provide as close to the full arterial landscaping requirement as allowed or recommended by the Colorado Department of Transportation (CDOT).
- Collector Street Rights-Of-Way. The developer is responsible for landscaping the entire area from the back of the curb to the property line at the time the adjacent land develops for a specific use. Collector street landscaping is intended to provide an overstory street canopy along collector streets and a landscaped area between the street and pedestrian paths.
  - Overstory/shade trees will be provided between the curb and the sidewalk with at least one (1) overstory/shade tree for every fifty (50) linear feet of right-of-way.
  - 60% of the landscape areas shall be covered with plant material within five (5) years of installation.
- Treatment of Ditch Rights-of-Way. Ditch rights-of-way shall be designed and installed by the developer as part of the public improvements and then dedicated to the Town as public right- of-way, in compliance with the Johnstown Area Comprehensive Plan and Town of Johnstown Landscape Standards and Specifications. Applicant should receive approval from the Ditch Company prior to making any such improvements. Such areas are to be shaped and landscaped as follows:
  - The publicly dedicated area will be landscaped in a similar fashion to the rest of the development and as approved by the JPDRC and JRC.
  - At a minimum, both irrigated and dryland grass will be the primary groundcover, except for shrub bed areas. The decision shall be elective on the part of the JPDRC and JRC.
  - Sloped areas shall not exceed a 4:1 slope in seeded areas. Where slopes exceed flat grade, rip-rap will be applied, per the Town's direction.

2.4 Parks, Open Space, Regional Detention and Natural Areas

Shall meet the criteria as established in the Johnstown/Milliken Parks, Trails, Recreation and Open Space Plan at the time in which the Design Guidelines are adopted.

2.4.1 Open Space Requirements:

- Retail – 15%
- Office – 15%

SECTION 3 — GENERAL DESIGN GUIDELINES:

3.1 Applicability

3.2 Site Planning & Design

3.3 Pedestrian, bicycle and Other Non-motorized Circulation

3.4 Vehicular Access & Circulation

3.5 Parking

3.6 Landscaping

3.7 Site Development Signage

3.8 Site Furnishings

3.9 Lighting

3.0 General Design Guidelines for Development

3.1 Applicability

This section applies to all development within Johnstown Plaza and contains specific information on performance standards and guidelines for the design of public areas and private property, construction practices, landscape maintenance and the acceptable plant palette.

In utilizing these regulations, one should remain flexible in approach to site design given the characteristics of the site, the nature of the use and the intent of these standards.

3.2 Site Planning & Design

3.2.1 Site Design, Building Placement and Orientation

- Minimize environmental impact through sensitive design and mitigation.
- If possible, orient the long axis of the buildings north-south to avoid winter ice conditions created by long north-facing facades.
- Utilize trees to maximize shade in summer and reduce heat gain of paved surfaces.

3.2.2 Storm Drainage

The goal of the design of sites is to minimize runoff and design needed storm drainage systems to meet basic engineering requirements while using the most current technology to improve the quality of the storm water before it reaches natural systems that may be affected by poor water quality. This philosophy reduces infrastructure costs, increases groundwater recharge and improves the environment.

- Site drainage shall be compatible with adjacent property drainage and in accordance with the overall master drainage plan for Johnstown Plaza. Storm drainage shall not run on a neighbor's lot at rates higher than historic rates prior to construction of the subdivision.
- Excess run-off from the site shall be minimized with sites graded to provide positive drainage away from buildings.
- Water from parking lots, roof drains and other areas should be consciously directed to landscape areas that could benefit from the additional water rather than piping it off the property, thereby reducing the need for irrigation water and improving water quality by filtration through landscape materials. Roof drains on north side shall be

piped to an open space.

- Drainage shall be conveyed along dedicated streets, private drives and swales along property lines, or in open space corridors. Drainage will be sheet flow and surface drained where possible; however, below-grade drainage using storm sewer piping and culverts may be required.

- Surface drain systems and detention ponds shall be irregular in plan and graded to create an aesthetically pleasing character. Side slopes shall vary.
- Drainage structures in sidewalks and bike paths must be placed flush with the surface, and grate patterns cannot have openings larger than 3/8 inch. Surface storm water or irrigation should not be discharged across sidewalks; and there should be no point discharges into curbs to prevent traffic-impeding surges into the street.
- No concentrated drainage over walks, drives or trails shall occur.
- Detention areas or other landscape areas that are not used to meet the open space standards of these Landscape Guidelines shall be landscaped as follows:
  - Dryland grass or other approved vegetation will be the primary ground cover. All areas within the floodplain, including, but not limited to, the detention area bottom, shall be planted with buffalo grass or other dryland grass if it is maintained free of weeds and irrigation is provided until the grass is fully established. Live plant material other than dryland grass may be planted if it is suitable to the area and is maintained free of weeds and irrigation is provided.
  - Detention areas will be landscaped around the perimeter with plant groupings sensitive to the detention area design and will include at least one (1) tree and five (5) shrubs for every 100 linear feet of perimeter. Trees and shrubs are encouraged in other landscape areas where appropriate.
  - Clusters shall be separated by a minimum of twenty (20) feet as measured at maturity.

3.2.3 Utilities, Easements & Rights-of-Way.

At the time of adoption, the following guidelines for easements were required. It is the developer's responsibility to confirm the validity of these guidelines at the time of development.

- 20 foot AT&T Easement. Proposed activity within the AT&T easement subject to review and approval by AT&T. At the direction of AT&T, for proposed utility and street crossings, encasement of the existing AT&T line and encasement of the proposed utility may be required. In addition, sleeving may be required to be installed for future AT&T use. No building shall be constructed within the AT&T easement.
- 50 foot KANEB High Pressure Pipeline Easement. Proposed activity within the Kaneb easement subject to review and approval by Kaneb. At all street or road crossings, Kaneb must have a minimum of five (5) feet of cover in the area of the crossings and a minimum of three (3) feet of cover in the areas of any borrow ditches, drainage ditches, etc. No building, structure, area of congregation, gathering, or work shall be within fifty (50) feet of the

pipeline unless the pipeline is provided with a minimum of 48 inches of cover. There shall be no fences, engineering works, structures, etc. built, constructed, or permitted to be constructed within twenty-five (25) feet of the pipeline. Any utility crossing installed must be installed with a minimum twenty-four (24) inches separation below the bottom of Kaneb's pipeline and the top of the utility, and utility (except sewer and water) to be placed in a steel casing which extends a minimum of ten (10) feet either side of Kaneb's pipeline, and utility shall cross as close to a 90 degree angle as possible but not less than 45 degrees. All landscaping upon easement must be approved by Kaneb. Should any modification be required for Kaneb to maintain, operate, or protect this pipeline to meet the conditions stated above, all costs associated to these modifications shall be at the sole expense of the developer.

- Farmer's Ditch. Activity within the easement shall be reviewed and approved by the ditch company.
- 30 foot Great Western Railroad Right-of-Way. Permits required for road and utility crossings. Activity within the R.O.W. shall be reviewed and approved by the railroad company. Retail and office uses shall have a minimum ten (10) foot buffer from the edge of the railroad right-of-way and residential uses shall have a minimum twenty-five (25) foot buffer. This buffer requirement shall not apply to light industrial and flex.
- US 34 Right-of-Way. Access is permitted at designated access points, subject to any CDOT and/ or Johnstown approvals.
- Proposed infrastructure within Johnstown Plaza will be designed to meet the Town of Johnstown Design Criteria and Construction Regulations at the time in which the Design Guidelines are adopted.

3.2.4 Grading

- Provide positive drainage away from foundations.
- Site buildings to minimize cut and fill earthwork operations.
- There shall be no grading beyond the limits of each property except as agreed upon by adjacent owners.
- Maximum slopes 3:1. Maximum 4:1 slopes for areas that require mowing.

3.2.5 Existing Vegetation Preservation

- Existing vegetation shall be preserved to the extent reasonably practicable. Special attention shall be paid to preserving significant vegetation within larger open space areas such as along the Big Thompson River and the drainage area west of the site.
- Locate site and building improvements to preserve significant natural vegetation to the extent reasonably practicable.
- Within open space areas, preserve and incorporate into the landscape plan any existing healthy tree (meeting

species restrictions) of 6-inch caliper or larger and located more than twenty (20) feet from any proposed building location. Preserve all trees over 24-inch caliper, unless deemed unhealthy or unsuitable for preservation.

- Incorporate tree wells or retaining walls as necessary in the landscape plan to protect existing trees and to maintain historic drip lines.
- All existing plants that are incorporated into the design will be adequately protected from damage during construction by an orange construction fence (4 feet high) secured with steel t-posts at the drip line of each tree. Sufficient posts shall be used to maintain the fence in erect condition at all times. Hand grading only shall be allowed within the limits of the construction fencing. No more than 6 inches of cut or fill shall be allowed within the drip line of any tree designated to remain.
- If on-site replacement is not possible, the developer shall provide an equal replacement of caliper lost or a ratio of three new trees to one existing tree on-site as mitigation for any desirable trees lost due to or prior to construction.

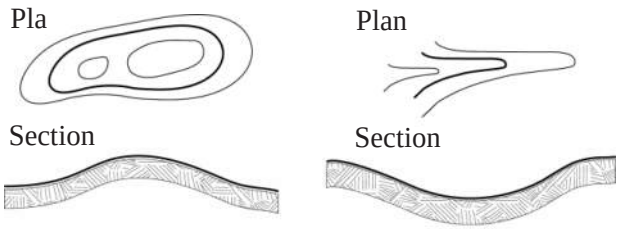

DO THIS
- Irregular forms imitate nature
- Smooth transition to adjacent grades
- Varied side and bottom slopes
- Gentle side slopes used where possible
- Rounded surfaces

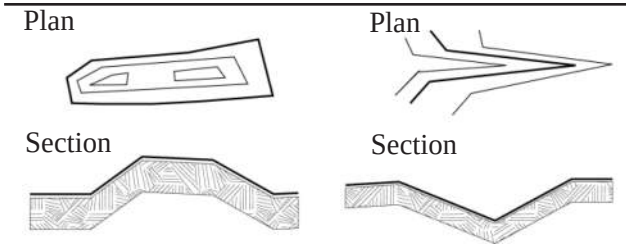

NOT THIS
- Un-natural rectilinear form
- Abrupt grade transition to adjacent areas
- Constant side and bottom slopes
- 3:1 max. side slopes

Berm Topography **Swale Topography**

- Existing landscaping may be used to satisfy the quantity requirements of landscape guidelines. One existing tree or shrub may be considered as satisfying one tree or shrub requirement.
- All existing trees over 6 inches in diameter will be surveyed as part of the landscape requirements and have location, species, size, and condition or health noted. Trees that are of good or better quality, and are a desirable species, should be incorporated into the design in their existing location whenever possible. If design solutions create undue hardship, as determined by the JPDRC and JRC, replacement shall be made per requirements above.

3.2.6 Screening: Large Truck Parking, Utility Appurtenances, Loading, Storage and Service Areas, Trash storage/pickup

- These requirements apply to, but are not limited to above-ground utility appurtenances, loading docks, storage areas, and open areas where machinery, vehicles or equipment are stored or repaired.
- Areas shall be incorporated into the overall design of the building and landscaping so that the visual and acoustic impacts of these functions are minimized and 75% screened from adjacent properties.
- Loading areas shall be paved with concrete, asphalt or other approved hardened surface as approved by JPDRC and JRC. A concrete pad shall be provided in the access drive immediately adjacent to trash enclosures serviced by trash trucks and in the enclosure itself.
- Areas for outdoor storage, truck parking, trash collection or compaction, loading or other such uses shall be at least 75% screened

from abutting streets unless otherwise approved by the JPDRC and JRC. These service areas should be located within a central core or on the side of a building away from public streets where possible.

- Non-enclosed areas for seasonal sale of inventory shall be permanently defined and screened with walls and/ or fences that conform to those used as predominant materials and colors on the building.
- Service areas should not be located directly adjacent to residential areas. If this situation occurs, no delivery, loading, trash removal or compaction, or other such operations shall be permitted between the hours of 10:00 p.m. and 7:00 a.m. unless the owner submits evidence the sound barriers effectively reduce noise emissions to a level of 45 db as measured at the lot line of the adjoining property.

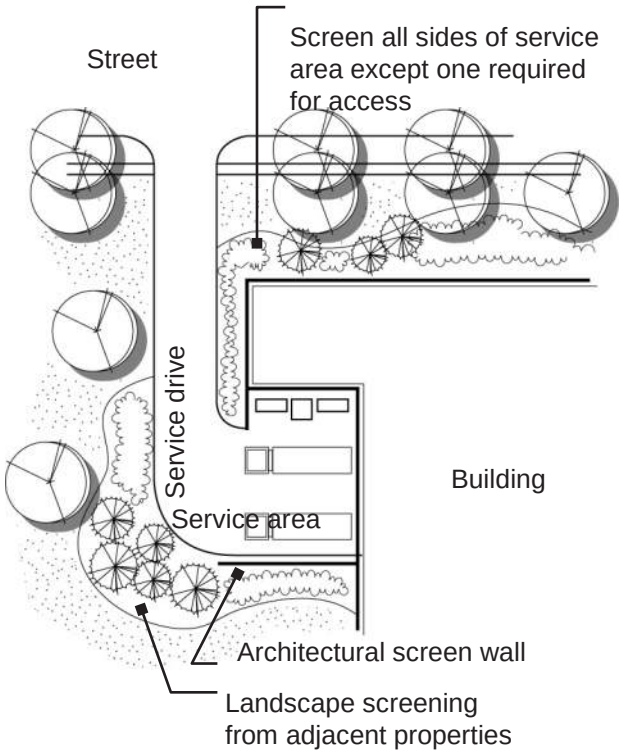

Service Area Screening

3.3 Pedestrian, Bicycle and Other Non-motorized Circulation

3.3.1 Walkway Design Criteria

- All streets shall have sidewalks. The minimum width of sidewalks shall be five (5) feet for residential and collector streets and ten (10) feet for arterial streets.
- Arterial streets shall have detached sidewalks and sidewalks shall adjoin the curb and gutter at all intersections.
- Internal pedestrian walkways shall be distinguished from driving surfaces through a change in paving materials to enhance the crosswalk.
- Provide logical pedestrian connectivity from the street and parking areas to the buildings main entrance.
- Provide minimum five (5) feet clear walking area after car overhang (seven (7) foot minimum walk width adjacent to head-in parking and five (5) foot minimum walks apply in all other cases).

3.3.2 Bike Lanes

- Bike Lanes shall maintain a minimum four (4) foot width on all arterials and collector roads.

3.3.3 Recreational Paths & Trails

- Shall meet the criteria as established in the Johnstown/Milliken Parks, Trails, Recreation and Open Space Plan at the time in which the Design Guidelines are adopted.

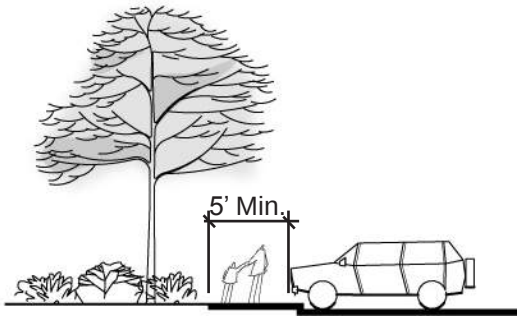

Parking Overhang

3.4 Vehicular Access & Circulation

Design of vehicular drives/roadways and parking areas shall meet the criteria as established in the Town Johnstown Design Criteria and Construction Regulations at the time in which the Design Guidelines are adopted.

3.4.1 Roundabouts

- Roundabouts are often an effective tool for traffic management. They are used largely to: reduce motor vehicle speeds, increase capacity level, increase safety, and to reduce noise and air pollution. Therefore, the use of roundabouts will be considered at arterial/collector street intersections and shall be designed to the standards contained in the Federal Highway Administration (FHWA) publication Roundabouts: An Information Guide, June 2000.
- The Town Traffic Engineer shall approve the use and design of roundabouts.
- The configuration of proposed roundabouts shall be designed by a licensed Transportation Engineer with a minimum of five (5) years' experience in roundabout design.

3.4.2 Emergency Access

Provide access for fire, police, ambulance, and other emergency vehicles to buildings in accordance with Loveland Rural Fire Protection District Development and Construction Requirements. Such access should be fully capable of supporting such vehicles. Where possible, connect emergency access routes between adjacent properties.

3.4.3 Sight Triangles

Shall meet the criteria as established in the Town of Johnstown Design Criteria and Construction Regulations at the time in which the Design Guidelines are adopted.

3.4.4 Bus Stops

- Bus stops should be provided off street within parcels where it is easy and logical for people to access. The actual locations shall be coordinated with the transit provider and the JPDRC and JRC at the time transit service is provided.
- Shelters, if deemed necessary, shall be designed with a solid roof, enclosed on one or more sides, and provide seating within the protected area. Landscaping can also be used as wind breaks around transit facilities.
- Locate bus shelters in close proximity to primary pedestrian walkways and where possible, locate bus shelters behind the sidewalk so the sidewalk passes between the shelter and the street.
- In order to provide safe loading and unloading of buses, sidewalks shall be designed so that a paved surface is provided at both the front and rear doors of the bus when the bus is parked at the facility. Coordinate design of these facilities with the transit provider.

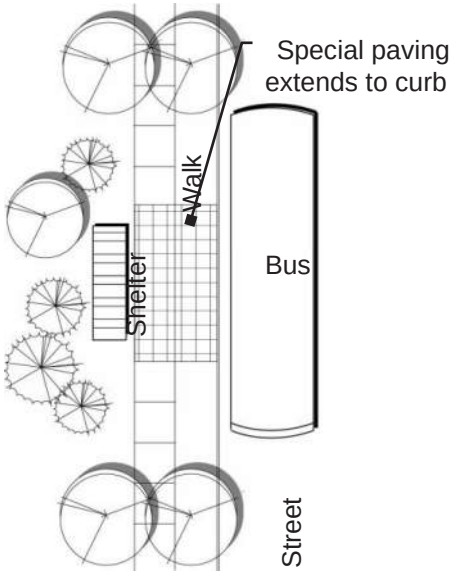

Bus Stop Plan

3.4.5 Drive-Through Facilities

- Drive-through facilities are a convenient service, however they may create barriers to pedestrian movement and present an unattractive appearance unless they are thoughtfully designed and located.
- Drive-through facilities shall be located on the site and not on public right-of-way.
- There shall be no stacking of waiting vehicles into the public right-of-way, primary interior circulation routes or across pedestrian walkways.
- Drive through windows, menu boards and stacking areas shall be subject to the same set back and screening requirements as parking lots.
- Each drive-through restaurant shall be permitted no more than two (2) free-standing or wall- mounted menu boards, which shall not exceed 35 square feet in area or six (6) feet in height and shall be located adjacent to and oriented toward the drive-through lane. One (1) order confirmation board may also be permitted per menu board and shall not exceed a four (4) foot height and three (3) square foot sign area.

3.4.6 Access Between Adjacent Parcels

Provide vehicular and pedestrian access to existing and future adjacent properties where feasible.

3.5 Parking

3.5.1 Parking Lot Design

- The dimensions of parking spaces will be per the Town of Johnstown Design Criteria and Construction Regulations, at the time in which the Design Guidelines are adopted, or the approved development plan for the property. Minimum parking requirements are listed in the following table.

USE	PARKING REQUIREMENTS
Clinics	1 space for every 250 sq. ft. of G.L.A.
Commercial Office Buildings	1 space for every 250 sq. ft. of G.L.A.
Retail Stores	1 space for every 250 sq. ft. of G.L.A.
Customer services establishments	1 space for every 200 sq. ft. of G.L.A.
Restaurant or Bar	1 space for every 100 sq. ft. of G.L.A.
Planned Shopping Center	1 space for every 250 sq. ft. of G.L.A.
Outdoor and Indoor Family Entertainment	1 space for every 250 sq. ft. of G.L.A.

- Design parking lots to current Americans with Disabilities Act (ADA) standards. Provide equal access in a manner that integrates handicapped-accessibility with ordinary accessibility, rather than separately.
- Except where orchard style planting is used, large parking lots shall be divided into smaller sections by landscape areas. Each section shall contain a maximum of 250 parking spaces. Landscape areas used to break up large parking areas shall be a minimum of fifteen (15) feet in width.

(1) Landscape areas separating parking blocks will have at least one overstory/shade tree or two (2) ornamental trees and five (5) shrubs for every 50 linear feet along the length of the median. Overstory shade trees will comprise at least 75% of the trees within the landscape area.

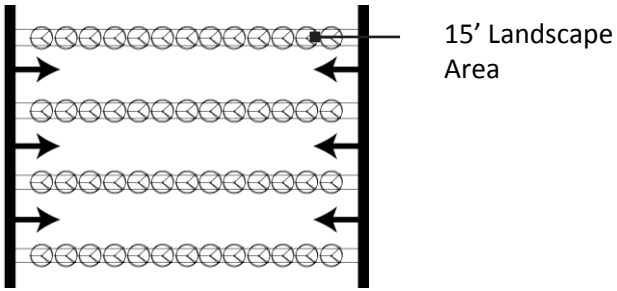

Division of Large Parking Areas

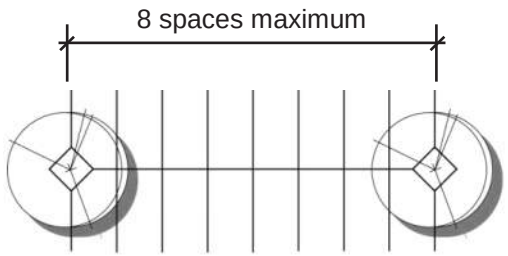

Orchard Style Parking

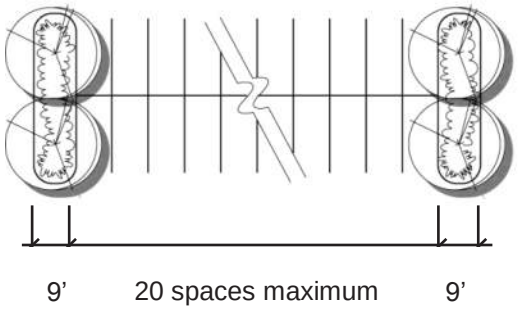

Parking With 40 or More Spaces

- In a development, parking lots for each use shall be integrated within the development to the extent possible.
- All striping in parking areas shall be white.

3.5.2 Perimeter Landscaping Requirements.

- Perimeter landscaping requirements for parking areas include a minimum seven and one-half (7.5) foot wide landscape area with one (1) tree and five (5) shrubs per 600 square feet or portion thereof. When combined with adjacent properties requirements, this perimeter landscape will become fifteen (15) feet wide.
- Where two (2) perimeter landscape areas abut each other, the first to develop shall provide the tree requirement. The tree requirement for the abutting development need not be met, however, the second developer is responsible for installing the shrub requirement.
- Where parking areas are located directly adjacent to residential development, both the parking lot buffer requirement and the nonresidential buffer requirements shall apply.

3.5.3 Interior Landscaping Requirements.

- Interior rows of parking spaces will provide a landscape island at the end of each row of parking spaces. Landscape islands will also be provided within the row of parking spaces so that there are no more than twenty (20) consecutive parking spaces without a landscape island.
  - Landscape islands will have minimum dimensions of nine (9) feet by the length of the parking row.
  - Islands will be landscaped at a rate of at least one (1) overstory/shade tree and three (3) medium or five (5) small shrubs for each 9 foot by 18 foot parking island. Overstory/shade trees will comprise at least 75% of the trees within the landscape islands. Evergreen trees shall be prohibited in parking lots unless island widths are sized to accommodate mature growth.
  - Landscape islands will contain rock, mulch or irrigated grass. No turf grass shall be planted in parking lot islands or medians unless the turf area is at least ten (10) feet wide.
- Where orchard style planting is proposed in parking lots, internal landscaping shall be provided at a rate of one (1) tree and two (2) shrubs for every ten (10) parking spaces. At a minimum, one (1) diamond-shaped tree planting pit shall be provided for every eight (8) parking spaces. No shrubs shall be planted in the diamond tree planting pits and will be located in end islands and other landscape islands instead.
- A concrete pedestrian walk, at least six (6) feet wide, will be provided along the length of the landscape median closest to the building entrance. The walk will connect to perimeter pedestrian walks, whenever possible, and include raised and striped crosswalks.
- Planting trees and non-low-growing shrubs in the vehicle overhang area is not allowed.

3.5.4 Interim Parking Lots

- With JPDRC and JRC approval, on-grade interim parking may be allowed if weather delays asphalt or concrete paving. It must be landscaped and paved with an all-weather material. Internal parking lot landscaping is not required for interim parking areas, but perimeter landscape treatments shall be consistent with the landscape requirements for permanent parking lots.

3.5.5 Bicycle Parking

- Bicycle parking facilities are required for all land uses, except for single-family attached or detached housing.
- Bicycle parking facilities shall be located to provide safety, security and convenience for bicycle riders. Such facilities shall not interfere with, and be located a safe distance from, pedestrian and motor vehicular traffic.
- Bicycle parking facilities should be located outside of a vehicular or pedestrian way and be protected and separated from motor vehicle traffic and parking lots by either a three (3) foot separation distance or a curb or other physical barrier.
- For security reasons, bicycle-parking areas should be located so they are highly visible from building entrances and convenient for employees, yet not generally visible from roadways.
- It is recommended that bicycle parking facilities be designed to allow the bicycle frame and both wheels to be securely locked to the parking structure. The structure shall be of permanent construction such as heavy gauge tubular steel and permanently attached to the pavement foundation.
- If the bicycle facility is to be used at night it should be sufficiently illuminated.
- Select bicycle racks that provide for a wide range of bicycle types and individual security devices. Designs should facilitate bicycle lockup.
- Provide protection from the elements. Specific considerations include the following:
    - Shelters and bike lockers are encouraged but not required.
    - Protected overhangs incorporated into a building's design are a desirable solution.
    - Shelter design and materials should complement the architectural design of the primary building.

Bollard Bicycle Rack

Standard Bicycle Rack

3.6 Landscaping

3.6.1 Landscape Design Principles

All development shall demonstrate adherence to the following landscape design principles:

- Provide biodiversity that relates to the area's natural systems.
- Design to provide an attractive, comfortable environment for users while minimizing maintenance needs, irrigation water requirements and the use of herbicides and pesticides.
- Use environmentally friendly, "green" materials where possible.
- Design landscapes to create a naturalized appearance. Use plant materials that are indigenous to Northern Colorado where possible. (See the plant list in the Appendix). Only use introduced species in order to achieve design objectives that cannot be achieved with the use of native species.
- Locate plants in microclimatic conditions that are appropriate for that species. Only use high water-requiring plants in areas where they will naturally benefit from runoff or available ground water. Do not rely solely upon an irrigation system to provide water to high water-requiring plants.
- Group plant materials of similar water needs and arrange in concentric circles or layer of progressively less water use in order to maximize the efficiency of applied irrigation.
- Use plant materials to provide buffering of structures and outdoor use areas from extreme climate conditions.
- Coordinate the design of the landscape with site erosion protection, storm drainage and water quality improvement systems.
- Utilize a minimum of three (3) inch deep mulch to reduce soil moisture loss and moderate soil temperatures.
- Where natural soils are not of high quality, improve soil structure by the addition of composted organic material.
- Design and manage irrigation systems to achieve peak efficiency.
- No turf grass shall be allowed in landscape areas less than eight (8) feet in width.

2. Plant species more susceptible to sun, wind & cold temperatures in sheltered areas.
3. Evergreen trees to provide shelter from winter winds.
4. SW facing plants should tolerate summer heat & drying winds.
5. Eastern facing areas allow some shelter from sun & wind.
6. Deciduous trees shade in summer and let light through in winter.

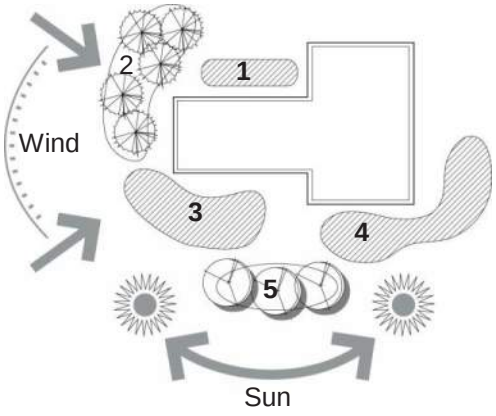

Microclimatic Considerations

3.6.2 Landscape Performance Standards

- Landscaping shall be completed prior to Certificate of Occupancy (C.O.). If landscaping cannot be completed due to cold weather, the Town may grant a C.O. upon receipt of a sufficient letter of credit or cash surety and a written schedule for completion. No letter of credit or surety is required if the landscaping is to be performed by the Metropolitan District.
- Cold Weather' duration is November 1 to May 1.
- A professional Landscape Architect or Landscape Designer shall be utilized in the design documents for landscaping, in compliance with State of Colorado standards.

3.6.3 Irrigation systems

All landscape areas shall have an automatic clock-activated irrigation system unless waived by the Town. Landscape areas without an irrigation system (when waived by the Town) and bearing live plant material will require temporary irrigation until the plants are established and a reliable water source sufficient to sustain plant life is provided. Irrigation systems shall meet the following criteria:

- All potable-water irrigation systems shall be designed with a 6:00 p.m. – 8:00 a.m. watering window to minimize evaporative loss. Systems shall also be designed with zoning to minimize tap sizes.
- An automatic controller shall activate the system. Remote control valves shall operate each zone valve.
- The system shall provide head-to-head coverage to all landscaped areas. The system shall not spray or irrigate impervious surfaces, including sidewalks, streets and parking areas.
- All potable water systems shall be equipped with a backflow prevention device.

- Design for very low water use where a parcel abuts an open space in detention areas.

- Design for low water use at site perimeter or low-use areas.

- Limit moderate water use to heavily used areas, i.e.: employee courtyards, entrances.

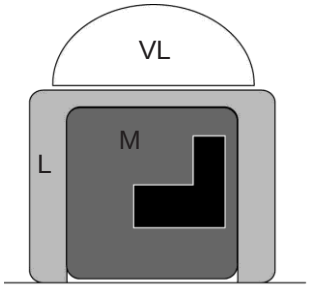

Water Use Zones

- Spray heads, rotors and drip systems shall all be zoned separately from one another.
- Drip irrigation shall be provided for all trees and shrubs located in shrub beds and in all native seeded areas (even those areas approved for temporary irrigation for native seed). Trees located in irrigated turf areas shall not receive drip. Drain valves shall be included at the end of each drip lateral pipe.
- In-line quick couplers shall be provided 300 feet on center for all native area irrigation systems to be turned over to the Town for maintenance.
- Along arterial rights-of-way, where ultimate improvements are not required, the area between the Initial Phase curb and the future Ultimate Phase curb and/or existing edge of asphalt shall be irrigated with zones separate from the rest of the right-of-way system.

The use of untreated water for irrigation supply is required. At all times of use, a conspicuous notice shall be posted warning that untreated ditch water is being used for irrigation. Notwithstanding anything contained within this section 3.6.3 to the contrary, non-potable irrigation must meet the standards and specifications that are posted as a link on the 2534 Master Association's website:
(http://www.2534colorado.com/master_association/).
(See Appendix for copy of the standards.)

Portions of irrigation systems may be comprised of temporary irrigation components to irrigate native areas if the Town determines that all of the following standards are met. A clear description of proposed temporary irrigation must be provided on the landscape plan and approved by the Town.:

- Plant selection, design, installation specifications and site conditions combine to create a microclimate that will sustain the plant material in a healthy condition without regular irrigation after the plant establishment period.
- All portions of the landscaped area served by temporary irrigation will be within 150 feet of an exterior water source to enable hand watering during extended dry periods.
- Above ground temporary irrigation systems shall be approved on a case-by-case basis only if the native area is large enough to warrant the use. Above ground systems will be the responsibility of the Developer until grasses are established and the system is removed. No such system shall be permitted to be turned over to a Owner's Association for maintenance.
- The temporary irrigation will provide reliable automated irrigation for the plants during the establishment period.
- The Developer has demonstrated the ability to provide ongoing maintenance of xeriscape areas necessary to keep plant material healthy without irrigation.

3.6.4 Soil Amendment

Given the condition of the existing soil, soil amendment is only necessary where designated by the JPDRC and JRC. Where soil amendment is necessary, minimum requirements for soil preparation shall include three (3) cubic yards of organic material for 1,000 square feet of existing soil tilled to a minimum depth of six (6) inches. Tree and shrub pits shall be backfilled using a mixture of one- third existing site soil, one-third topsoil and one-third organic matter.

3.6.5 Plant Selection and Diversity.

Plant selection and diversity will be per Town Standards. Tree species prohibited within the Town per Town Standards will be removed by the developer in existing landscape areas, when appropriate, and will not be planted in new landscape areas.

- All landscaping materials shall consist of healthy specimens compatible with local climate and meet the requirements included in these standards.
- The plants listed in Appendix A are approved and recommended for use. Due to the variety of available plants, non-prohibited species that are not on the list may be planted provided they are replaced by an approved species if they fail to survive. Plants selected should be appropriate for the specific location and purpose.
- Up to one-third of the proposed trees for a project may be of fast-growing varieties, such as cottonless Cottonwood (Populus sargentii), Aspen (Populus tremuloides), Silver Maple (Acer saccharinum) and Autumn Purple Ash (Fraxinus americana 'Autumn Purple'). Two-thirds of the proposed trees shall be slower growing, long-lived trees, such as Norway Maple (Acer platanoides), Oak (Quercus sp.), Linden (Tillia sp.), Honeylocust (Gleditsia triacanthos inermis) and other hard Maples (Acer saccharum or rubrum). The variety shall be sufficient to minimize the effect of plant disease.

- Recognizing that it is undesirable to plant a large percentage of one tree species which may result in uniform disease susceptibility and eventual extinction of that species, the following diversity standards shall be required:
    - For any one proposed development project (including common open space areas), no more than 15% of any one species of tree (for trees considered hardy in this area), or 10% of any one (1) species of tree considered marginally hardy for this area, shall be proposed. This shall be measured per total trees in the development, including existing trees.
    - For small development projects, exceptions to the above diversity requirement may be allowable where the size of the development makes minimum diversity percentages unreasonable. A variance request is to be made by a note on the landscape plans and shall be subject to approval by the Town Planner.
    - Coniferous trees shall comprise 25% of any landscaped area, where suitable. Unsuitable areas include areas where icy conditions may be created with the use of conifers at road intersections, road curves, bike path intersections,

bike path curves site distance restricted areas or narrow areas. Locate conifers so mature spread will not overgrow streets or walks.

- Ornamental trees can only replace large canopy trees at a rate of three (3) ornamental trees to one (1) large canopy tree (not to exceed 25% of the total tree requirements). Fruit bearing or thorny trees shall not be permitted within five (5) feet of sidewalks or streets, as calculated from mature canopy width of tree.

- Shrubs shall be a mixture of evergreen and deciduous varieties. Small shrubs shall be used between the bike path and the curb along street rights-of-way to avoid safety obstructions.
- Street tree minimum standards are as follows:
  - Species that generally have branches less than fifteen (15) feet above the roadway at maturity shall not be used as street trees unless they are located such that no interference with the roadway will occur at maturity. Minor trimming and branch removal should be performed to maintain the fifteen (15) foot requirement and eight (8) foot minimum clearance over sidewalks and bike paths.
  - Trees prohibited from planting within the Town of Johnstown include the following: cotton-bearing Cottonwood, Lombardy Poplar, Box-elder, Siberian or Chinese Elm, and Russian Olive.
  - Trees prohibited from planting within street right of ways include the above plus the following: Fruit and/or thorn bearing trees (prohibited from within five (5) feet of bike path as measured from edge of mature canopy), willow (all varieties), Tree of Heaven, Cottonwood (all varieties), and Silver Maple.
  - Trees recommended for use within the Town of Johnstown include those listed in Plant Materials List found in appendix of the Town of Johnstown Landscape Guidelines.
- Planting sizes for required landscapes:
  - Deciduous shade trees: 2-inch caliper.
  - Ornamental trees: 1-1/2-inch caliper.
  - Evergreen trees: 6 foot – 8 foot height (with a minimum of 25% at 8 foot height).
  - Multi-stem ornamental trees: 8 foot – 10 foot height.
  - Shrubs: 5-gallon container.
  - Vines: 1-gallon container.
  - Ground cover/perennials: 2-1/4 inch pots.

3.6.6 Landscape Maintenance

- Maintenance includes all reasonable and regular irrigation, weeding, weed control, fertilizing, pruning as well as removal of tree wrap and staking, and bike path snow and ice removal per standard horticultural practices and Town code. Plant materials that show signs of insect pests, diseases and/or damage shall be appropriately treated. Dead plant material will be replaced according to an approved landscape plan. An initial inspection of landscaping installation will be done at the time of development or change in use.
- The developer and subsequent owner(s) shall be responsible for maintaining all on-site and common landscaping as shown on an approved landscape plan or as existing if an approved landscape plan does not exist.
- The developer and subsequent owner(s) shall be responsible for maintaining the landscaping public improvements on all adjacent rights-of-way as shown on an approved landscape p l a n or as existing if an approved landscape plan does not exist, unless a maintenance agreement is reached with another entity. The Town, at its discretion, may add, remove, replace, or maintain landscaping within the right-of-way per Town standards.
- The developer may request Town maintenance of arterial rights-of-way where there will not be a property owners association in the development or subdivision. The following standards shall apply:
  - Acceptance of maintenance will be based on the determination that the public interest is served by Town maintenance.
  - The developer will maintain the improvements for two (2) years following construction acceptance by the Town of such improvements, and thereafter until the Town has granted final acceptance for maintenance for those improvements.
- The developer may request Town maintenance of other facilities not included above. The following standards shall apply:
  - Acceptance of maintenance is based on the determination that the public interest is served by Town maintenance.
  - Installation of all improvements shall meet or exceed Town Standards.
  - The developer will maintain the improvements for two (2) years following construction acceptance by the Town of such improvements, and thereafter until the Town has granted final acceptance for maintenance for those improvements.
- The developer and subsequent owner(s) shall be responsible for maintaining all irrigation systems in sound condition and so all plant material receives the necessary amount of water. Leaks and other broken and/or non-performing equipment shall be repaired in a timely manner. Systems shall be periodically adjusted to eliminate water spraying onto paved surfaces. Watering times shall be regularly adjusted to meet the seasonal needs of the plants while minimizing overwatering.

3.7 Site Development Signage

3.7.1 Purpose

The following sign guidelines provide a language for all signage which helps to create a unified image for Johnstown Plaza. All freestanding signage within the development will bear the style and logo of Johnstown Plaza and 2534, however individual logos and graphics are allowed on the sign face. Freestanding signs located throughout the development are unified through the use of similar geometry and a repetition of a common materials palette. Building mounted signs are regulated by limiting size, however users personal logos and graphics are allowed.

3.7.2 Prohibited Signs

Prohibited signs, as listed in the Town of Johnstown Zoning Code, are flashing/moving signs, animated signs, unsafe signs, roof signs, signs which cause radio or television interference and signs in the restricted site triangle at corners.

3.7.3 Sign Area Measurement and Allowances

Allowable sign areas and sizes shall be per the Town of Johnstown Sign Code, at the time in which the Design Guidelines are adopted.

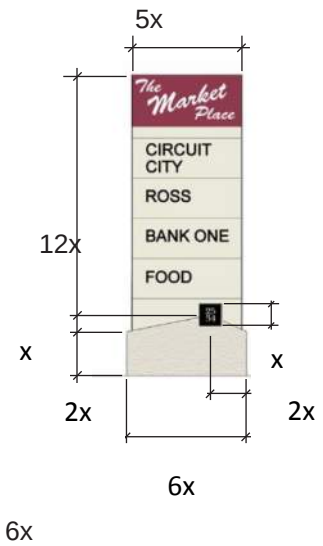

3.7.4 Freestanding Signs

Retail: Single tenant signs are highly discouraged, commercial/retail uses should be combined into an overall sign with multiple tenants where possible. When single tenant signs are necessary, provide a smaller version of a sign that is sympathetic to the intent of the design shown. Individual user logos may be used, however they should be sized uniformly or in a proportional manner (i.e. Large tenant size, Small tenant size half the proportion of the large tenant).

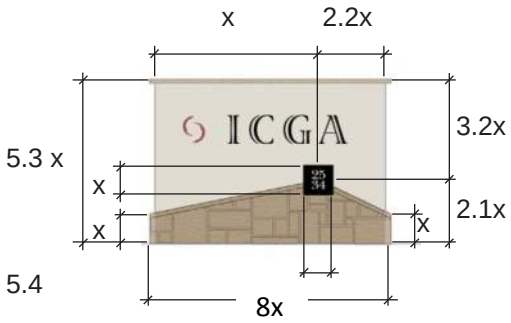

General Proportions for Signage

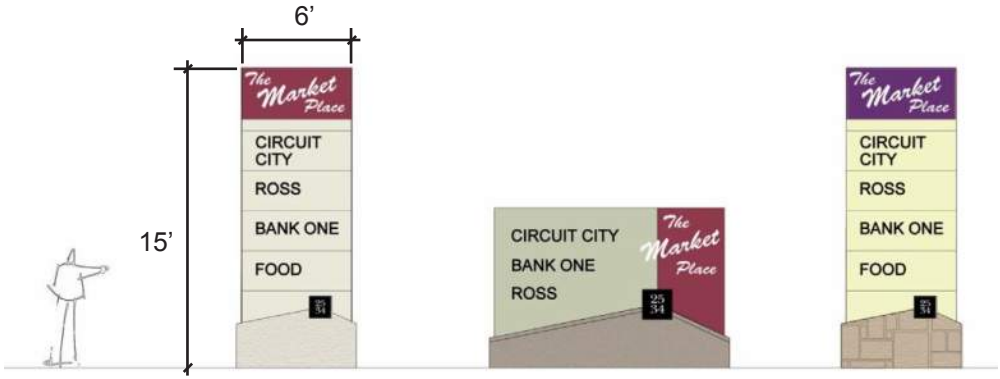

BASE MATERIALS
- Rough cut sandstone - random ashlar pattern
- Earthtoned stucco
- Sandstone

SIGN PANEL MATERIALS
- Earthtoned stucco with accent color on maximum 1/3 sign face
- Metal cabinet
- Cut stone
- Concrete

Johnstown Plaza and 2534Logo
-

3.7.5 Fuel/Convenience Store Canopy Signs

Signs on canopies associated with fuel/convenience stores shall be limited to one corporate with associated text or business logo of the principal use only on a maximum of two (2) sides of the canopy. Such logos shall have a vertical dimension of no greater than 75% of the vertical dimension of the canopy fascia and shall be no greater than twelve (12) square feet per logo.

3.7.6 Awnings

Signs on awnings are permitted on the bottom eighteen (18) inches of first floor awnings and allowed at one-half (1/2) square feet per linear foot of awning. The maximum letter height is twelve (12) inches. There is a maximum of one (1) sign per awning and the sign may be illuminated.

3.7.7 Regulatory Signs

Regulatory signs shall follow the guidelines established in the Town of Johnstown Design Criteria and Construction Regulations.

3.7.8 Other

- Temporary signs shall follow the guidelines established in the Town of Johnstown Zoning Code.
- Banners: Retail uses are allowed one (1) banner per building, not-to-exceed seven (7) days in a six-month period. Office, Light Industrial and other Commercial uses are allowed a one (1) day special event directional sign announcing open house/grand opening events.
- Window Signs: Window painting is not allowed. Each business will be allowed one (1) "OPEN" neon sign. No other neon signs are allowed, except as specifically approved by the JPDRC and JRC. No decals or signs may be installed in doorways, windows or other areas visible to the public view from the exterior of the premises. The real estate window sign is intended for use where leasable office space is available.
- Building Entry Information: If applicable, each business shall be allowed to post building or occupant names, hours of operation, emergency information, delivery hours and other required notices near its main exterior entrance on a wall or adjacent glass side-light adjacent to main entry doors. Maximum letter height shall be one (1) inch for basic information. Name of the building or occupant may be three (3) inches tall. Logos shall be a maximum of six (6) inches tall. All type must fit within a maximum 2 feet by 2 feet area. Type style shall be consistent with other building signs.
- Wall mounted information shall be applied to a panel that is compatible with the surrounding wall treatments. The panel area shall not exceed four (4) square feet.
- Buildings that provide service entrances shall be allowed an additional sign on or adjacent to each delivery door. Information shall be limited to a four (4) square feet area and design shall be consistent for all exterior doors of the building.
- Flags: Flag poles shall be a minimum height of twenty (20) feet tall and a maximum height of thirty (30) feet. Only properly maintained national and/or state flags are allowed.
- Pennants: Pennants that project a maximum of four (4) feet from the building are allowed on retail, entertainment or service commercial buildings, and only as part of an approved special district sign program. All pennant faces shall be counted as part of the total allowable sign area. Pennants located on light fixtures are allowed only by the Johnstown Plaza management group.

3.8 Site Furnishings

3.8.1 Site Furniture

Shall be compatible with the architecture, and if part of a larger complex of buildings, compatible with the other site furnishings in that complex. Site furniture for the overall Johnstown Plaza site should be similar or compatible with the following examples shown pending approval of the JPDRC and JRC.

3.8.2 Art

Art in public places is highly encouraged. The proposed piece must be vandal resistant, appropriate subject material for public viewing, and complementary with the theme, materials, and colors of Johnstown Plaza as determined by the JPDRC and JRC.

Site Furniture Examples

3.8.3 Fencing & Walls

Chain link is not permitted. No wood retaining walls are allowed (nonresidential only). Fencing and walls shall match building architecture. All fences and walls subject to JPDRC and JRC approval.

Functional Roadway Lighting

3.9 Lighting

The lighting design concept for Johnstown Plaza uses decorative lighting to enhance the main entries of the development. CR5 and CR3E, north of the major east/west road in the development, will be a combination of decorative lighting and functional roadway lighting.

- Notwithstanding anything contained herein to the contrary, all lighting shall meet specifications identified within the "Lighting Cut Sheets" document for the Johnstown Plaza Development. In the instance where multiple sizes, specifications or part numbers are listed, those that are highlighted shall govern and be used.
- All light sources shall be contained in cut-off fixtures that obscure the source from direct view. Pedestrian-scale lighting that has secondary decorative visible light source may be acceptable provided that it does not produce glare.
- Uplighting is acceptable as long as they are subdued and angled towards surfaces and not lit straight into the sky. No searchlights are permitted.
- Parking lot and street lights will be standard dark bronze anodized, except when decorative. All roadway lighting should be of the same family of style, and all parking lot lighting shall be of the same family of style; however roadway and parking lot lighting need not match.
- Minimum / Maximum allowable lighting:
  - Non-residential building, surrounding and parking 1.0 / 2.0 footcandles
  - Residential building surrounding and parking 0.1 / 0.5 footcandles
  - Under canopy fueling areas and drive-ups 1.0 / 10.0 footcandles
- Temporary lighting – Holiday lighting only November 1 through January 31. No "chasing" lights (Nonresidential only).
- Minimize lighting in parking areas when not in use.
- All lighting is subject to approval by JPDRC and JRC.

Examples of possible pedestrian lighting styles

RETAIL USE AREAS

SECTION 4.1 — INTRODUCTION:

4.1.2 Retail Team Directory

4.1.3 Retail Area — Overall Site Plan

4.1.3 Building Addresses Diagram

RETAIL DEVELOPMENT DIRECTORY:

OWNER/LANDLORD:
Carson Development, Inc
7242 W. 135th Street, Suite B29
Overland Park, KS 66223
913.499.1926

GENERAL CONTRACTOR:
Carson Development, Inc
7242 W. 135th Street, Suite B29
Overland Park, KS 66223
913.499.1926

CIVIL ENGINEER:
Point Consulting
8460 W. Ken Caryl Avenue
Littleton, CO 80128
720.258.6836

ARCHITECT:
DeGasperi & Associates
6240 W. 135th Street
Overland Park, KS 66223
913.647.5300

MECH/ELEC/PLUMB ENGINEER:
PEC Engineers
420 Linden Street, Suite 110
Fort Collins, CO 80524
970.232.9558

STRUCTURAL ENGINEER:
Bob D. Campbell & Company
4338 Belleview
Kansas City, MO 64111
913.531.4144

STRUCTURAL ENGINEER:
PEC Engineers
420 Linden Street, Suite 110
Fort Collins, CO 80524
970.232.9558

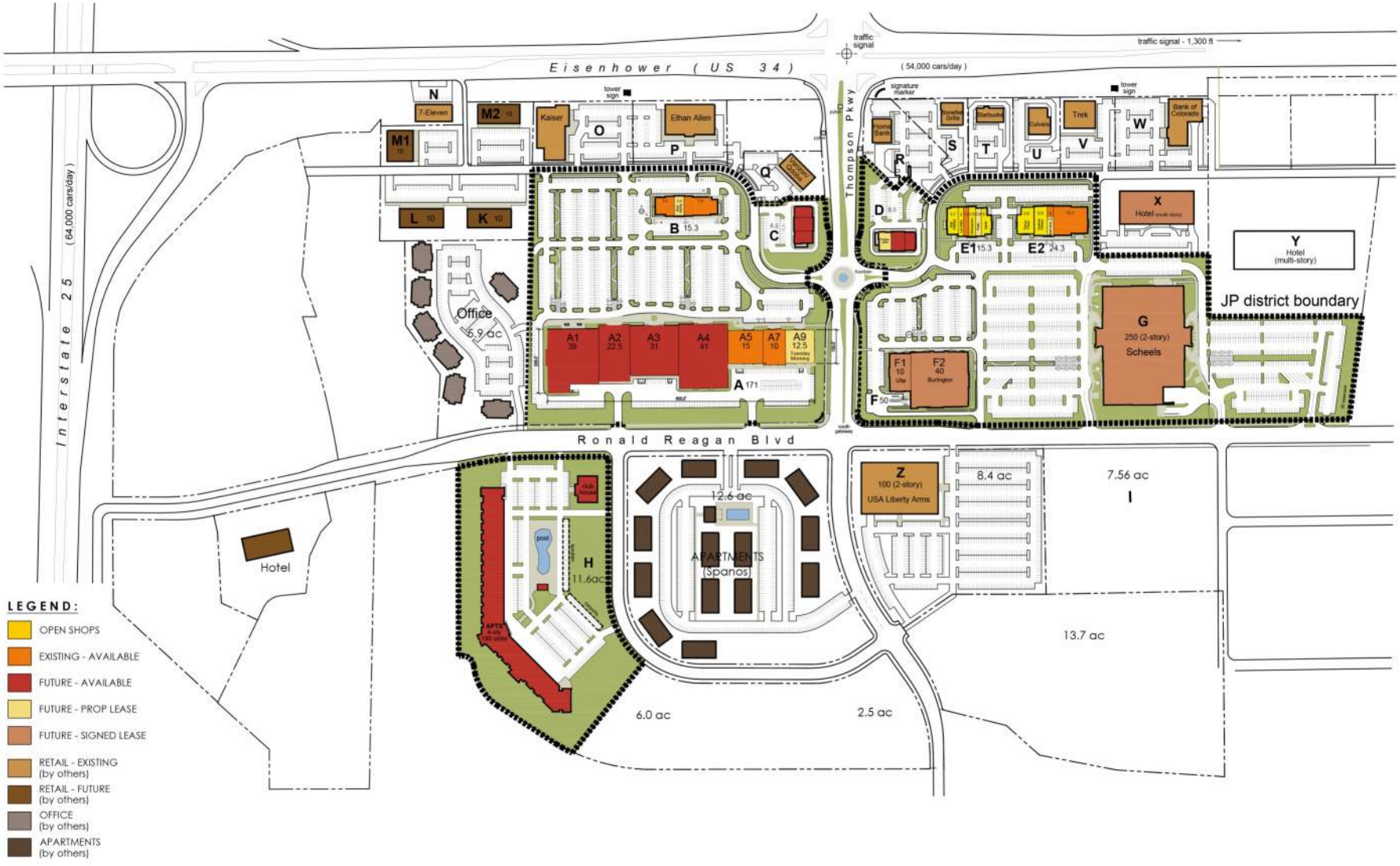
Eisenhower (US 34)
(54,000 cars/day)
traffic signal
traffic signal - 1,300 ft
Interstate 25
(64,000 cars/day)
Thompson Pkwy
Ronald Reagan Blvd
N
7-Eleven
M1
M2
Kaiser
O
Ethan Allen
P
Q
L
K
B
C
Office
6.9 ac
A1
A2
A3
A4
A5
A7
A9
A
D
E1
E2
F1
F2
F
R
S
T
U
V
W
Trek
Bank of Colorado
X
Hotel
Y
Hotel
(multi-story)
JP district boundary
G
250 (2-story)
Scheels
Z
100 (2-story)
USA Liberty Arms
8.4 ac
7.56 ac
I
13.7 ac
12.6 ac
APARTMENTS
(Spanos)
H
11.6ac
pool
Hotel
6.0 ac
2.5 ac
LEGEND:
OPEN SHOPS
EXISTING - AVAILABLE
FUTURE - AVAILABLE
FUTURE - PROP LEASE
FUTURE - SIGNED LEASE
RETAIL - EXISTING (by others)
RETAIL - FUTURE (by others)
OFFICE (by others)
APARTMENTS (by others)
July 12, 2017

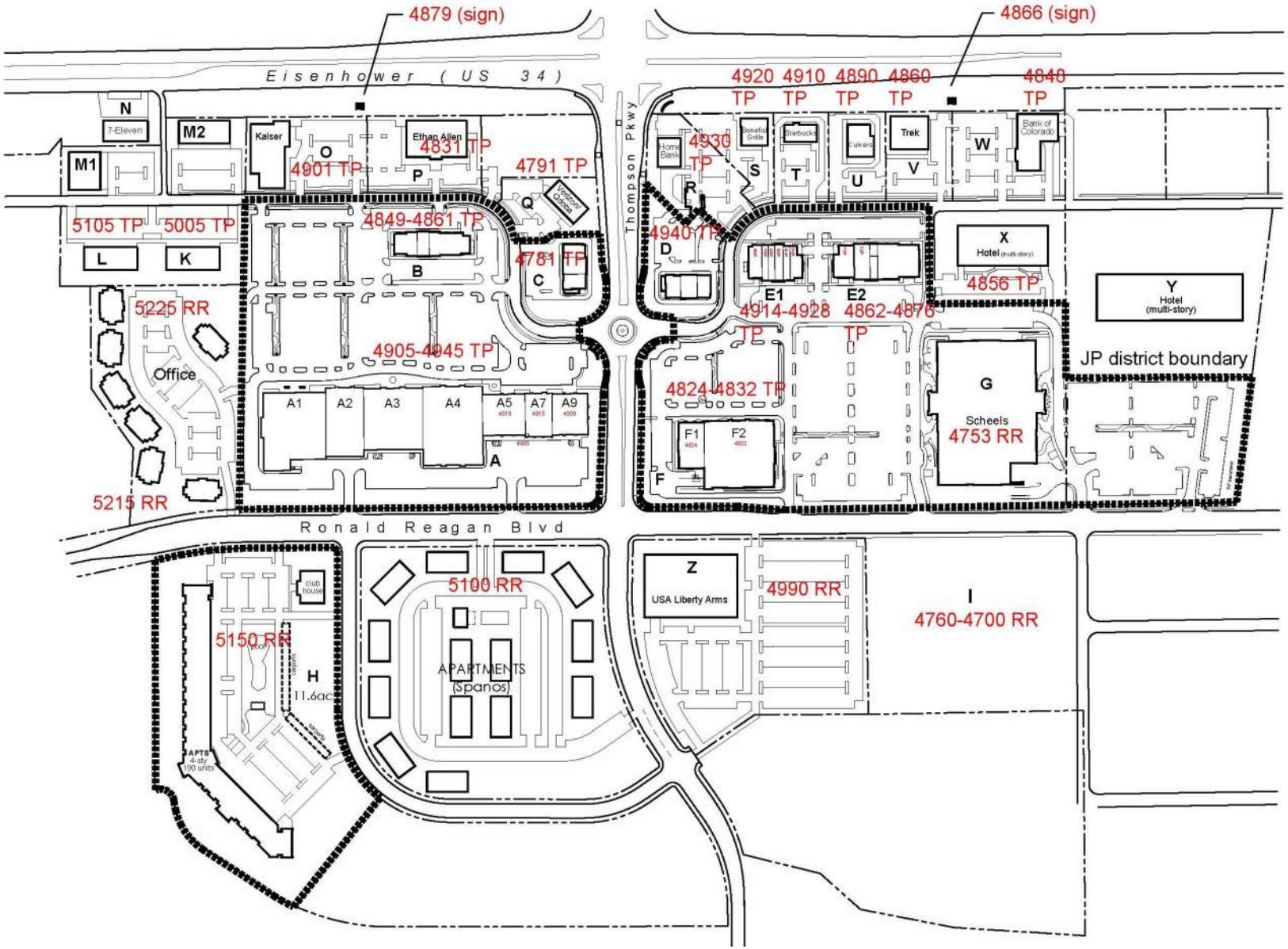

Assigned Addresses

RETAIL USE AREAS

SECTION 4.2— BUILDING DESIGN:

Buildings Kit of Parts:

4.2.2 Materials Palette

Conceptual Building Elevations:

4.2.3 Building A Elevations
4.3.4 Building B Elevations
4.2.5 Building E1 Elevations
4.2.6 Building E2 Elevations
4.2.7 Building F Elevations

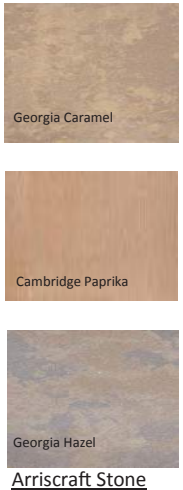

Arriscraft Stone

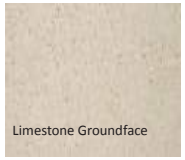

Prairie Stone

Cast Stone

Yankee Hill Brick

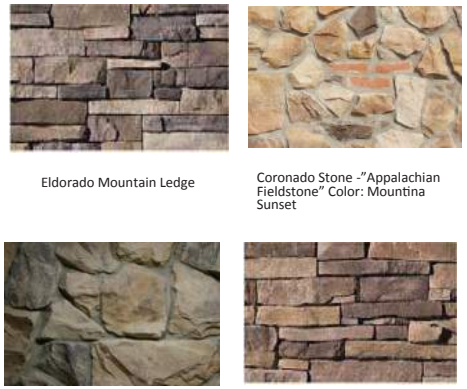

Eldorado Mountain Ledge

Coronado Stone -"Appalachian Fieldstone" Color: Mountina Sunset

Coronado Stone 'Appalachian Fieldstone", 'Mountain Sunset'

Eldorado Mountain Ledge Lexington

Stone Veneer

Metal Coping

Coronado Stone—Thin Brick,

Thin Brick

Wall Tiles

Stucco & Paint

STANDARD EXTERIOR MATERIALS

NORTH ELEVATION (west portion)

NORTH ELEVATION (east portion)

Building A

(conceptual)

N O R T H E L E V A T I O N

E A S T E L E V A T I O N

1 STONE:	manf.	- CANYON STONE (or equal)
	type A	- Canyon Ledge, "Sandy Buff"
	type B	- Canyon Ledge, "Suede"
	type C	- Castle, "Texas Cream"
	type D	- "Water Table Sill" unit, "Texas Cream"
	type E	- "Wall Cap" or "Hearthstone unit, "Texas Cream"
	grout	- BGS, 10H - "Light Buff"
2 THIN-BRICK:	manf	- CANYON STONE (or equal)
	type	- Thin Brick (1/2"), modular face size
	Type A	- "Peppermill" (field)
	grout	- colored, to be selected
3 STUCCO:	type	- Water-Managed EIFS
	manf.	- DRYVIT (or equal)
	texture	- body: "SWIRL"
		- trim: "SANDBLAST"
	reveals	- 1inch wide, typ.
	colors	- match Dryvit (or paint colors):
	color A	- Dryvit "Colonial Tan" (light field)
	color B	- Benj Moore "Sedona Brown" (brown field)
	color C	- Dryvit "Manor White" (light trim)
	color D	- SW7046 "Anonymous" (gray trim)
4 STOREFRONT:	material	- ALUMINUM FRAMING
	manf	- MANKO (or equal)
	style	- 2" x 4.5", THERMAL BROKEN
	finish	- DURANAR
	color A	- "CHARCOAL GREY"
5 GLAZING:	type A	- 5/8" insulative glass, clear
	type B	- 1" insulative glass, clear
	type C	- 1" insulative glass, frosted film (or apandrel)
	Tempar.	- Provide safety glazing per code
6 SHEET METAL:	finish	- GALVALUME, KYNAR PAINTED
	color A	- UNA-CLAD - "Slate Grey"
	color B	- UNA-CLAD - "Sierra Tan"
7 AWNINGS:	type	- FABRIC ON METAL FRAME
	manf	- SUNBRELLA
	color A	- "Black"
8 SERVICE GATE	wood	- TREX (or equal), color "Walnut"
	mtl panel	- Perforated galvanized, paint A
	all frame	- Galv steel, paint A
9 PATIO RAILING	type	- galv metal tube & bar
	finish	- Painted, color A
	details	- RE: sheet A46
10 STL CANOPY	all frame	- Galv steel channel
	color	- paint A
11 PAINT COLORS:	color A	- SW7020 "Black Fox"
	color B	- Benj Moore 1127 "Sedona Brown"
	color C	- SW7046 "Anonymous"
12 TENANT SIGNS:	type	- INDIVIDUAL LETTERS,
		- Per Tenant Vendor, under sep package
		- GC to provide FT plywood substrate at area indicated
13 LIGHT FIXTURE:	type	- WALL MOUNTED LIGHT FIXTURE
	style	- Refer to Electrical Drawings

Building B

(conceptual)

NORTH ELEVATION

EAST ELEVATION

1 STONE:	manf.	- CANYON STONE (or equal)
	type A	- Canyon Ledge, "Sandy Buff"
	type B	- Canyon Ledge, "Suede"
	type C	- Castle, "Texas Cream"
	type D	- "Water Table Sill" unit, "Texas Cream"
	type E	- "Wall Cap" or "Hearthstone unit, "Texas Cream"
	grout	- SGS, 10H - "Light Buff"
2 THIN-BRICK:	manf	- CANYON STONE (or equal)
	type	- Thin Brick (1/2"), modular face size
	Type A	- "Peppermill" (field)
	grout	- colored, to be selected
3 STUCCO:	type	- Water-Managed EIFS
	manf.	- DRYVIT (or equal)
	texture	- body: "SWIRL"
		- trim: "SANDBLAST"
	reveals	- 1inch wide, typ.
	colors	- match Dryvit (or paint colors):
	color A	- Dryvit "Colonial Tan" (light field)
	color B	- Benj Moore "Sedona Brown" (brown field)
	color C	- Dryvit "Manor White" (light trim)
	color D	- SW7046 "Anonymous" (grey trim)
4 STOREFRONT:	material	- ALUMINUM FRAMING
	manf	- MANKO (or equal)
	style	- 2" x 4.5", THERMAL BROKEN
	finish	- ANODIZED
	color A	- "DARK BRONZE"
5 GLAZING:	type A	- 5/8" insulative glass, clear
	type B	- 1" insulative glass, clear
	type C	- 1" insulative glass, frosted film (or spandrel)
	Temper.	- Provide safety glazing per code
6 SHEET METAL:	finish	- GALVALUME, KYNAR PAINTED
	color A	- UNA-CLAD - "Slate Grey"
	color B	- UNA-CLAD - "Sierra Tan"
7 AWNINGS:	type	- FABRIC ON METAL FRAME
	manf	- SUNBRELLA
	color A	- "Black"
8 SERVICE GATE	wood	- TREX (or equal), color "Walnut"
	mtl panel	- Perforated galvanized, paint A
	stl frame	- Galv steel, paint A
9 PATIO RAILING	type	- galv metal tube & bar
	finish	- Painted, color A
	details	- RE: sheet A47
10 STL CANOPY	stl frame	- Galv steel channel
	color	- paint A
11 PAINT COLORS:	color A	- SW7020 "Black Fox"
	color B	- Benj Moore 1122 "Sedona Brown"
	color C	- SW7046 "Anonymous"
12 TENANT SIGNS:	type	- INDIVIDUAL LETTERS,
		- Per Tenant Vendor, under sep package
		- GC to provide FT plywood substrate at area indicated
13 LIGHT FIXTURE:	type	- WALL MOUNTED LIGHT FIXTURE
	style	- Refer to Electrical Drawings

Building E1

(conceptual)

NORTH ELEVATION

EAST ELEVATION

WEST ELEVATION

SOUTH ELEVATION

Building E2

(conceptual)

Building F

(conceptual)

RETAIL USE AREAS

SECTION 4.3 — TENANT SIGN CRITERIA

4.3.2 Introduction & Descriptions
4.3.3 Sign Types & Parameters
4.3.6 General Sign Parameters
4.3.7 Signs Not Permitted
4.3.8 Additional Signage
4.3.9 Environmental Graphics
4.3.10 Directional Signage
4.3.11 Signage Size Key Map
4.3.12 Tower Sign—Criteria

TENANT SIGN CRITERIA

Building Parameters:
Pad Site Tenant— Leasable area 0 – 13,999 s.f.

Small Shop Tenant— Leasable area 0 – 11,999 s.f.

Sub-Major Tenant— Leasable area 12,000 – 19,999 s.f.

Major Tenant – Leasable area more than 20,000 s.f.–119,999

Anchor Tenant – More than 120,000 s.f.

Tenant Signage Design Criteria—Introduction:
(also applies to Pad Site/Outlot Tenants)

In the event of any conflict between the following signage requirements and local governmental ordinances, the more stringent will prevail. Upon written notice from Landlord/Developer, Tenant/Pad Site tenant agrees to take such actions as may be necessary to comply at Tenant/Pad Site Tenant's expense, with applicable requirements.

The purpose of this section is to define and specify all exterior signage criteria for Johnstown Plaza. (Entrance monuments will be addressed in the architectural plans). Each Tenant/Pad Site Tenant shall provide signage package for its space as described below.

All sign packages shall be submitted in triplicate for approval at least one hundred twenty (120) days of Lease Commencement Date to Landlord/Developer and Landlord/Developer's Architect prior to fabrication and installation. At a minimum, such drawings must show locations, sizes, and styles of lettering, materials, and types of illumination, installation details and logo design. Upon approval, Landlord/Developer will issue a letter of approval to the tenant for use in obtaining a sign permit from the city.

If the plans are disapproved by Landlord/Developer, the Tenant/Pad Site Tenant shall resubmit them within fifteen (15) days from date of the notice of any disapproval by Landlord/Developer, or its Architect until such plans are finally approved by Landlord/Developer.

The cost of the fabrication, permitting and installation shall be the responsibility of each individual tenant. Sign construction is to be completed in compliance with local building codes and sign ordinances, and the instructions, limitations and criteria contained in this manual. Each sign will conform to the limitations listed in this document below.

Sign Types and Parameters

The following types and amounts of signs will be permitted:

Small Shop Tenant Sign Parameters

(0 - 11,999 s.f.)

- The maximum height for letters in the body of the sign is listed on the SIGNAGE SIZE KEY MAP. (max size at discretion of Landlord)

- Signs shall not extend more than 8” beyond the face of the surface to which the sign is mounted.

- One (1) wall/marquee sign will be allowed at the storefront, one (1) will be allowed at the rear facade, and one (1) additional will be allowed at the storefront if the tenant is an endcap.

- Signage shall be illuminated individual letters mounted to the face of the building. The use of a colored or frosted Plexiglas face is required. Individual faces shall be fabricated from flat, smooth one-eight inch (1/8”) plexiglass. Letter returns shall be fabricated of .090 aluminum with .063 aluminum letter backs, fully welded. Retainers shall be one inch (1”) trimcap or the equivalent and shall match the return. All letters shall be illuminated.

- All signs must be illuminated from a concealed source. No exposed lamps, globes, tubes, etc. will be permitted.

- Marquee Signage: Allowed one (1) per storefront in lieu of Façade sign – 15 s.f. square feet maximum, letters shall be 16” maximum; maximum of two (2) total if an endcap. Sign shall be individually Illuminated letters, pin mounted to existing projected metal marquees. All exposed conduit shall be concealed from public view and painted to match marquee structure. Exposed raceways behind letters are not permitted. Marquis signage is subject to Landlord and City review and will be approved on an individual basis and shall be treated as a primary sign.

- Blade Signage: Allowed one (1) per storefront, seven (7) square feet max. Letter height shall be six (6) inches max.
  Blade signs are only allowed if below a canopy.
  The blade sign shall be located on an elevation drawing, with clear height to bottom of sign indicated. Decorative brackets and sign design are to reflect the qualities of the tenant and the shopping center design in it’s greater entirety.

- Placque: A 4 sf wall mounted Placque shall be allowed in lieu of a blade sign, in areas not under a canopy. Max letter height of 6”.

Pad Site Sign Parameters
(0 – 13,999 s.f.)

- Tenant/Pad Site Tenant sign area shall be on the building faces above the entrances and as part of the building design.
- The maximum height for letters in the body of the sign is listed on the SIGN SIZE KEY MAP (max size at discretion of Landlord/ Developer)
- The sign areas shall not exceed ten percent (10%) of the area of the facade.
- Maximum one sign per facade with a maximum of (3) three.
- Signage shall be illuminated individual letters mounted to the face Of the building. The use of a colored or frosted Plexiglas face is required. Individual faces shall be fabricated from flat, smooth one-eight inch (1/8”) Plexiglas. Letter returns shall be fabricated of .090 aluminum with .063 aluminum letter backs. Retainers shall be one inch (1”) trim cap or the equivalent and shall match the return. All letters shall be illuminated.
- Marquee Signage: Allowed one (1) per storefront in lieu of Façade sign – 15 s.f. square feet maximum, letters shall be 16” maximum; maximum of two (2) total if an endcap. Sign shall be individually illuminated letters, pin mounted to existing projected metal marquees. All exposed conduit shall be concealed from public view and painted to match marquee structure. Exposed raceways behind letters are not permitted. Marquis signage is subject to Landlord/Developer and City review and will be approved on an individual basis and shall be treated as a primary sign.
- One sign per building elevation with a maximum of (3) three total.
- All signs must be illuminated from a concealed source. No exposed lamps, globes, tubes, etc. will be permitted.
- Reverse channel halo lighting is encouraged.

Sub-Major Tenant Sign Parameters
(12,000 – 19,999 s.f.)

- Tenant sign area shall be on the building faces above the entrances and as part of the building design.
- The maximum height for letters in the body of the sign is listed on the SIGNAGE SIZE KEY MAP. (max size at discretion of Landlord)
- The sign areas shall not exceed ten percent (10%) of the area of the facade.
- Maximum one sign per facade with a maximum of (3) three.
- Signage shall be illuminated individual letters mounted to the face of the building. The use of a colored or frosted Plexiglas face is required. Individual faces shall be fabricated from fl at, smooth one-eight inch (1/8”) Plexiglas. Letter returns shall be fabricated of .090 aluminum with .063 aluminum letter backs. Retainers shall be one inch (1”) trim cap or the equivalent and shall match the return. All letters shall be illuminated.
- All signs must be illuminated from a concealed source. No exposed lamps, globes, tubes, etc. will be permitted.
- Reversed halo lighting is encouraged.

- The sign areas shall not exceed ten percent (10%) of the area of the facade.
- Maximum one sign per facade with a maximum of (3) three.
- Signage shall be illuminated individual letters mounted to the face of the building. The use of a colored or frosted Plexiglas face is required. Individual faces shall be fabricated from fl at, smooth one-eight inch (1/8") Plexiglas. Letter returns shall be fabricated of .090 aluminum with .063 aluminum letter backs. Retainers shall be one inch (1") trim cap or the equivalent and shall match the return. All letters shall be illuminated.
- All signs must be illuminated from a concealed source. No exposed lamps, globes, tubes, etc. will be permitted.
- Reversed halo lighting is encouraged.

Major Tenant
(More than 20,000 s.f. to 119,999)

- Tenant sign area shall be on the building faces above the entrances and as part of the building design.
- The maximum height for letters in the body of the sign is listed on the SIGNAGE SIZE KEY MAP. (max size at discretion of Landlord)
- The sign areas shall not exceed ten percent (10%) of the area of the storefront.
- Maximum one sign per facade with a maximum of (3) three.
- Signage shall be illuminated individual letters mounted to the face of the building. The use of a colored or frosted Plexiglas face is required. Individual faces shall be fabricated from flat, smooth one-eight inch (1/8") Plexiglas. Letter returns shall be fabricated of .090 aluminum with .063 aluminum letter backs. Retainers shall be one inch (1") trim cap or the equivalent and shall match the return. All letters shall be illuminated.
- All signs must be illuminated from a concealed source. No exposed lamps, globes, tubes, etc. will be permitted.
- Reverse channel halo lighting is encouraged.

Anchor Tenant
(More than 120,000 s.f.)

- Tenant sign area shall be on the building faces above the entrances and as part of the building design.
- The maximum height for letters in the body of the sign is listed on the SIGNAGE SIZE KEY MAP. (max size at discretion of Landlord)
- The sign areas shall not exceed ten percent (10%) of the area of the storefront.
- Maximum one sign per storefront with a maximum of (3) three.
- Signage shall be illuminated individual letters mounted to the face of the building. The use of a colored or frosted Plexiglas face is required. Individual faces shall be fabricated from flat, smooth one-eight inch (1/8") Plexiglas. Letter returns shall be fabricated of .090 aluminum with .063 aluminum letter backs. Retainers shall be one inch (1") trim cap or the equivalent and shall match the return. All letters shall be illuminated.

General Sign Parameters
(also applies to Pad Site/Outlot Tenants)

- In general signs must be made up of individual illuminated letters; conventional box signs that include attractive and distinctive designs with details such as raised letters will be considered on an individual basis.

- Lettering on all store signs shall be limited to business or trade name of the premises as it appears on the lease. No sign manufacturer's name, union labels, or other lettering shall be visible. Logo signs will be reviewed on an individual basis, but in general logos will not be allowed.

- Tag lines shall be allowed on an individual basis only and are subject to Landlord/Developer approval. Any allowable tag lines shall be individual illuminated letters (no box signs) and shall not exceed
10" in height. The width of the tag line shall not exceed the width established for the primary signage.

- No exterior sign or sign panel will be permitted to extend above any roof line.

- Any sign, notice or other graphic or video display, particularly self-illuminated signs, located within the store and which is easily visible from the shopping center will not be allowed. Illuminated Signs within 48" of a window are regarded as signage.

- Manufacturers' labels, underwriters' labels, clips, brackets, or any other form of extraneous advertising attachment or lighting devices shall be fully concealed from public view.

- No exposed lamps or tubing will be permitted.

- No exposed raceways, crossovers or conduits will be permitted.

- All signage returns shall be semi-glass black enamel finish or blend with adjacent building color.

- All cabinets, conductors, transformers and other equipment shall be concealed from public areas. Visible fasteners will not be permitted.
- All metal letters, including channel letters, shall be fabricated using fully-welded construction, with all welds ground smooth so as not to be visible.

- Acrycap or trimcap retainers used at the perimeter of sign letter faces shall match in color and finish the face or the sides of the sign.

- Threaded rods or anchor bolts shall be used to mount sign letters, which are spaced out from the building face. Angle clips attached to letter sides will not be permitted. All mounting attachments shall be sleeved and painted, and concealed.

- All signage whether halo illuminated or not, shall be pin mounted on building façade. Halo illuminated signage shall be pin mounted a minimum of 2" from builder façade. Direct or internally illuminated signage shall be pin mounted a minimum of 1/2'" and maximum of 1" from building face.

- Except as provided herein, no advertising placards, flags, balloons, banners, pennants, names, insignia, trademarks, or other descriptive materials shall be affixed or maintained upon the glass panes and supports of the storefront windows and doors, within 4' of the storefront without prior written approval of the Landlord / Developer. Painted, flashing, animated, audible, revolving, or other such signs that create animation are not permitted.

- Non-illuminated exterior signage is allowed upon approval and receipt of a Special Event Permit from Town.

- Any Plexiglas sign faces shall not be clear.
- Sign illumination shall be internal and self contained.
- Non-illuminated signs on the inside of window are not regulated by ordinances.
- All main signs are to be centered in the signage band.
- All electric signs and installation methods must meet UL standards and contain a UL label.
- At no time will hand-lettered, non-professional signs, or newspaper advertisements be displayed on the storefronts or within the Design Control Area.
- Decals or other signing indicating products lines or credit card acceptability shall not be permitted on the storefront glazing other than stores operating hours.
- All illuminated signs must be turned on during the Center's normal operating hours. The use of time clocks for sign and show window lighting is required. Lighting of signs shall be at hours required by Landlord/Developer.
- No logos will be allowed on Tenant/Pad Site Tenant storefronts without prior written approval.
- Double stacked lettering shall be allowed on an individual basis only and are subject to Landlord/Developer approval. Double stacked
  letters shall be a maximum 24" high individual letters and shall comfortably fit within the Landlord bulkhead as determined by the Landlord/Developer's Representative.
- Minimum height of all signage shall not be less than 60% of the maximum allowable letter height except for approved taglines.
- All signage is subject to the approval of the Landlord/Developer's Architect and the local authorities. Landlord/Developer has design discretion of overall size and height of letters and signs.
- Tenants are required to provide a concealed access panel from within the Tenant's leasable area, if applicable, to service and install exterior building signage

Signs Not Permitted
(also applies to Pad Site/Outlot Tenants)

The following types of signs shall not be permitted:

- Signs such as die cut vinyl, gold or silver leaf, or paint.
- Boxed pillow or cabinet typeFormed plastic or injection molded plastic signs.
- Banners or pennants without Special Event Permit from Town.
- Signature signage (window sign or sign plate indicating name of shop or good sold) in addition to primary signage.
- Cloth, paper, cardboard and similar stickers or decals around or on surfaces on the storefront without prior written approval from Landlord/Developer.
- “Sale” sign, “Special Announcements” sign or other advertisement of any kind on the exterior without Special Event Permit from City or written approval from Landlord/Developer.
- Exposed neon signs.
- Animated, moving, rotating or flashing.
- Noise making.
- Additional signage of any kind within 4’ of storefront windows.
- Awning signage.
- Use of the word “Outlet” in the signage text is prohibited.

Additional Signage
(also applies to Pad Site/Outlot Tenants)

Service doors to Tenant spaces throughout the project shall be standard 4”, identification only (name and address number) and shall be installed by the Tenant. The Tenant shall not apply any signage or other wording to service doors. All terms also apply to Pad Site & Outlot Tenants.

- All signage must be shown to scale on the approved storefront elevation.
- All additional signage shall be submitted to the Landlord/ Developer’s Representative for approval as specified in Section Two.
- Any minor deviations to this criteria will be reviewed on an individual basis and subject to Landlord/Developer approval.

Environmental Graphics

- Must be non-commercial graphics.
- Must be front lit with concealed or other non-exposed type lighting system. No backlit lighting is allowed.
- Glass is required and must be flush or recessed from facade opening.
- Graphics must integrate with building façade design.
- Designs must integrate with the overall shopping center design.

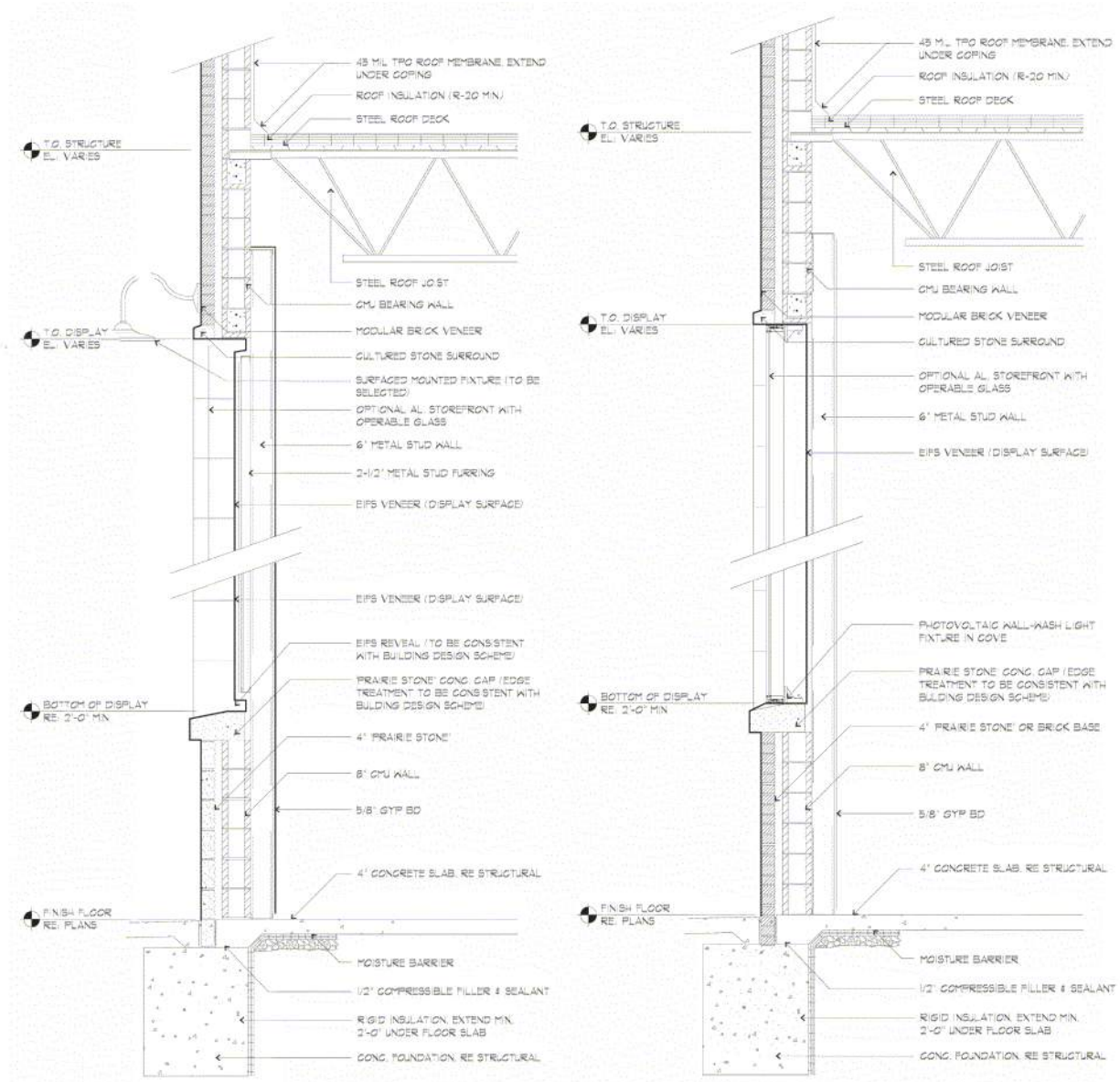

NON-COMMERCIAL DISPLAY WITH SURFACED MOUNTED FIXTURE

NON-COMMERCIAL DISPLAY WITH COVE LIGHT AND OPERABLE GLASS ENCLOSURE

Directional Signage

- Sign must not exceed four (4) square feet in total size.
- Logo must not exceed one (1) square foot.
- Directional signage must not exceed three (3) square feet.
- Sign support structure for directional signage must not exceed five (5) feet in height unless a deviation is granted.
- A deviation is required to include directional signage on entry markers.

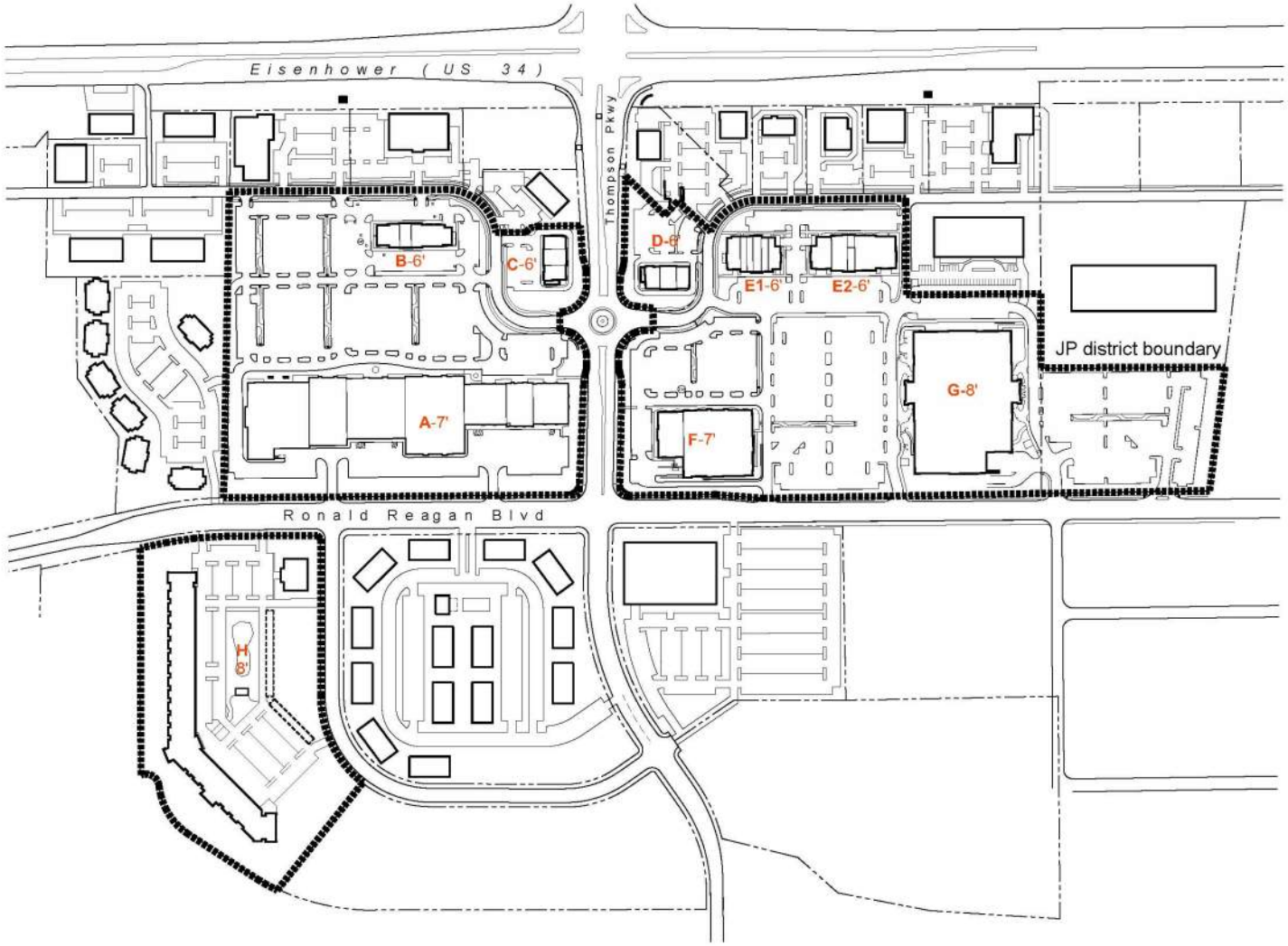

SIGNAGE SIZE - KEY MAP
July 12, 2017
north

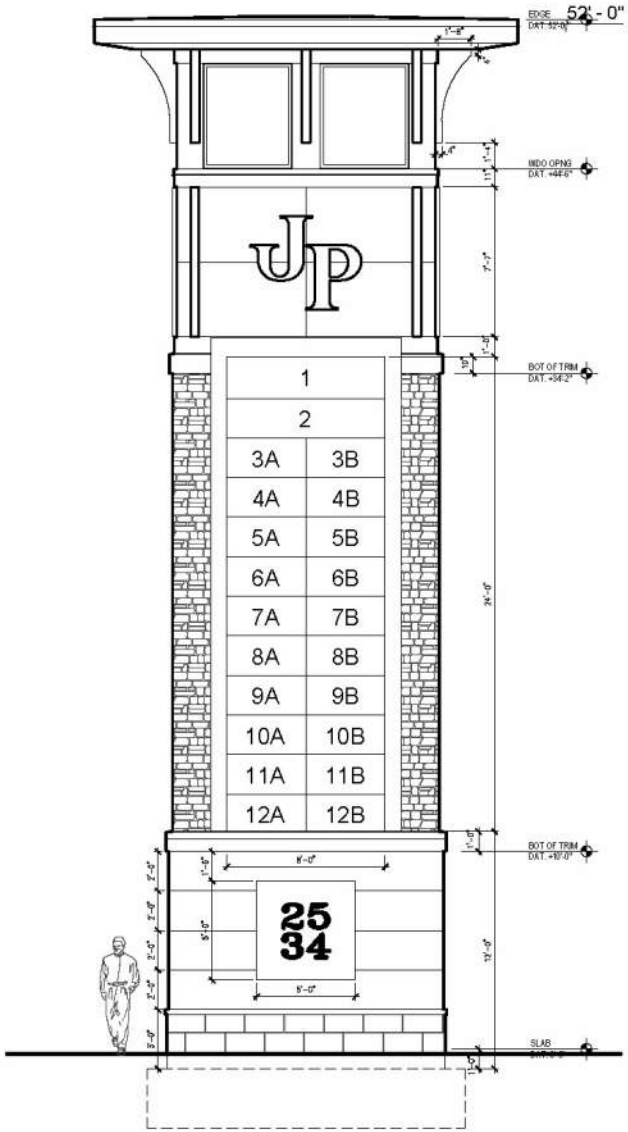

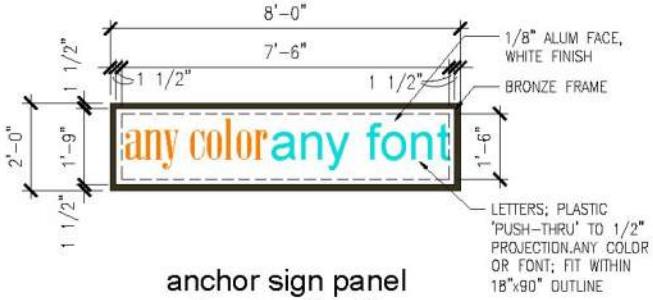

anchor sign panel
1 unit = 2' x 8'

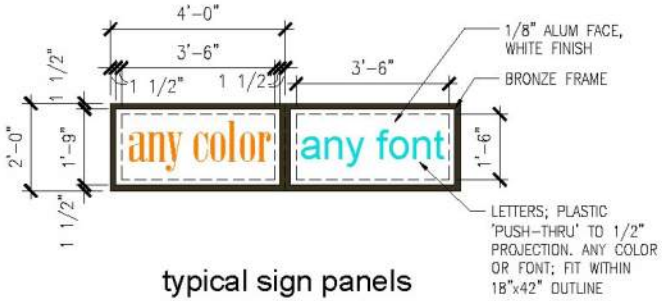

typical sign panels
1 unit = 2' x 4'

SIGN TOWER—CRITERIA

RETAIL USE AREAS
SECTION 4.4 — HARDSCAPE DESIGN:

Kit of Parts:

4.4.2 Site Furnishings
4.4.3 Site Lighting
4.4.4 Tower Sign
4.4.5 Monument Signs

Detailed Area Drawings:

4.4.6 Site Design—Amenities Masterplan
4.4.7 Sculpture Location Map
4.4.8 Central Roundabout—plan
4.4.9 Central Roundabout—Elevation
4.4.10 North Kiosk-Elevation
4.4.11 Terminus Court / Sitting—plans
4.4.12 South Gateway—plan
4.4.13 South Gateway—elevation

SITE FURNISHING & AMENITIES

1) Bench
   a) Material
      - Metal
   b) Accepted Manufacturers
      - SiteScapes - Westport
      - Landscapeforms - Plainwell
      - Medallion - Boston Bench
   c) Finish - Powdercoat
   d) Color - Black & Silver
   e) Mount
      - Permanent mount
2) Litter Receptacle
   a) Material
      - Metal
   b) Accepted Manufacturers
      - Landscapeforms - Plainwell
      - SiteScapes - Westport
   c) Finish - Powdercoat
   d) Color - Black & Silver
   e) Mount
      - Permanent mount
3) Bollards
   a) Type
      - Vehicular / Auto Barrier
   b) Material
      - Steel
      - Concrete

SiteScapes - Westport Receptacle

Landscapeforms - Plainwell Receptacle

Landscapeforms - Plainwell Bench

SiteScapes - Westport Bench

Medallion— Boston Bench

SITE LIGHTING

1) Decorative Pole Lights
   a) Manf—Luminus, EC811
   b) Finish - Anodized, Dark Bronze
   c) Mount
      - Conc Base -Permanent mount
2) Standard Parking Lot Lights
   a) Manf—
   b) Finish - Anodized Aluminum
   c) Color - Dark Bronze
   d) Mount
      - Conc Base -Permanent mount
3) Bollards
   a) Type
      - Vehicular / Auto Barrier
   b) Material
      - Steel
      - Concrete
   c) Accepted Manufacturers
      - Architectural Area Lighting - CB9 Round
   d) Color - Powdercoat Black

Landscapeforms - Annapolis Bollard

Decorative Pole Light

TOWER SIGN:

1) Construction
   a) Stone Base, CMU substrate
   b) Brick or stone veneer
   c) Backlit upper crown
   d) Stucco sign backdrop
   e) Metal Signature Letters
   f) Plastic Letters
   g) Internally Lit tenant signs

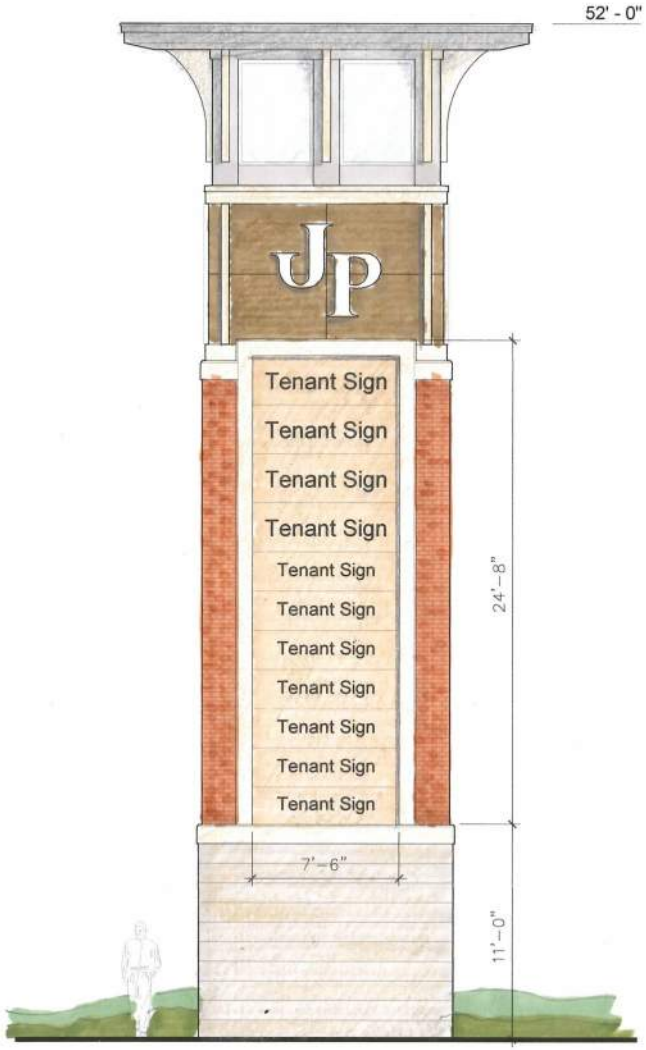

MONUMENT SIGN:

1) Construction
   a) Stone Base, CMU substrate
   b) Black Sign backdrop
   c) Metal Signature Letters
   d) White Tenant Letters
   e) Eternally Lit

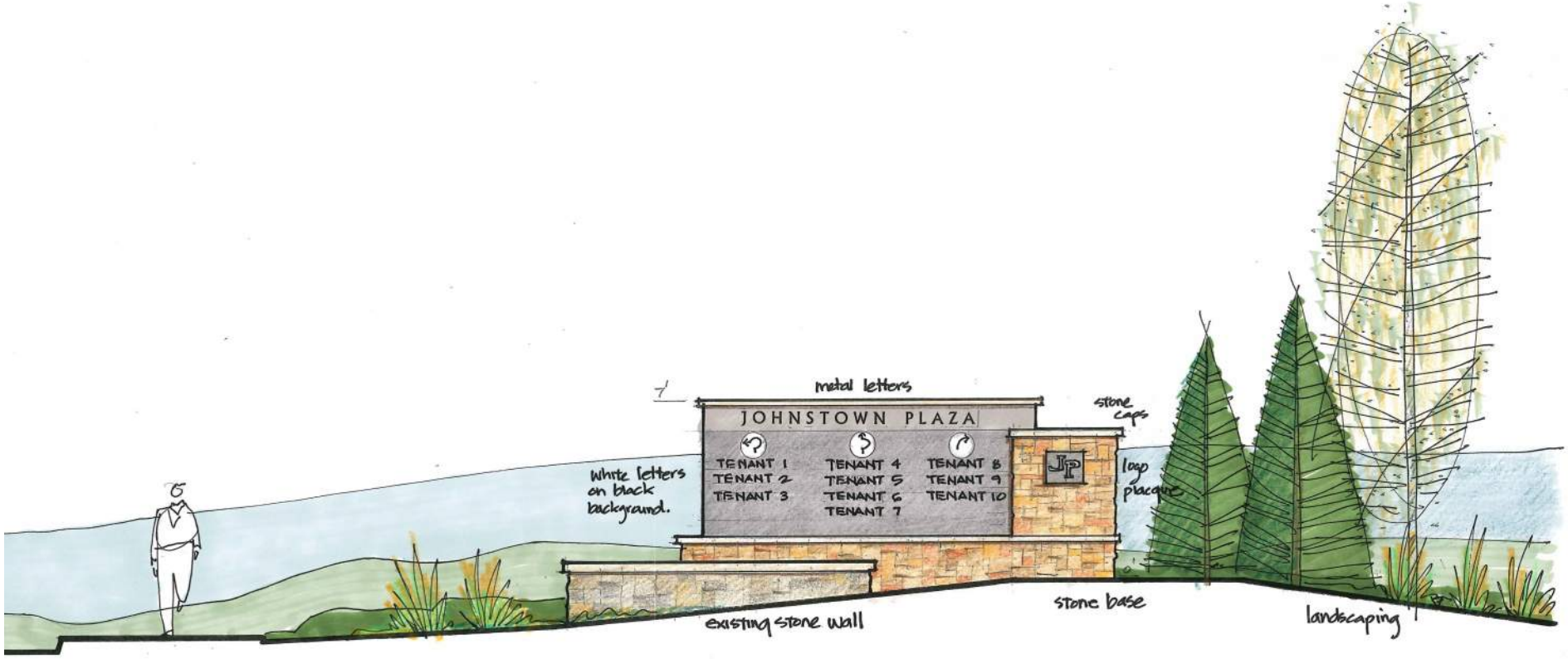

1. This Masterplan is a conceptual guideline for overall site layout, and location of primary site amenities.
2. Enlarged Plans indicated on the masterplan are shown on subsequent exhibits
3. Building Plaza Designs are to be developed with each building design.
4. Primary components are shown in the “kit of parts” chapters.

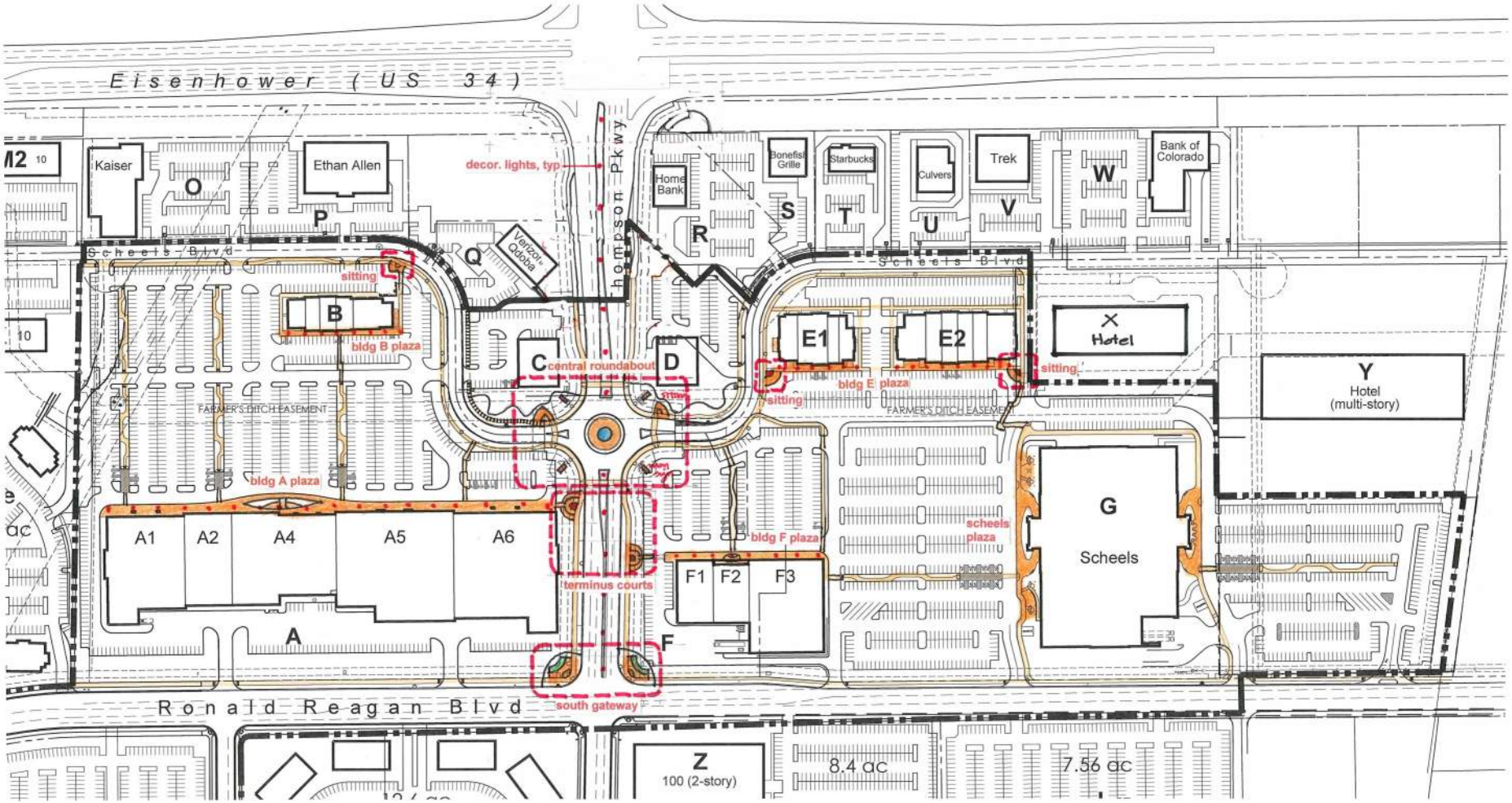

1. Bronze Wildlife Sculptures are placed along Thompson Parkway from Eisenhower leading to the central roundabout.
2. Small identity pylons are placed closer to Eisenhower in central median and on east and west sides of Thompson Park-

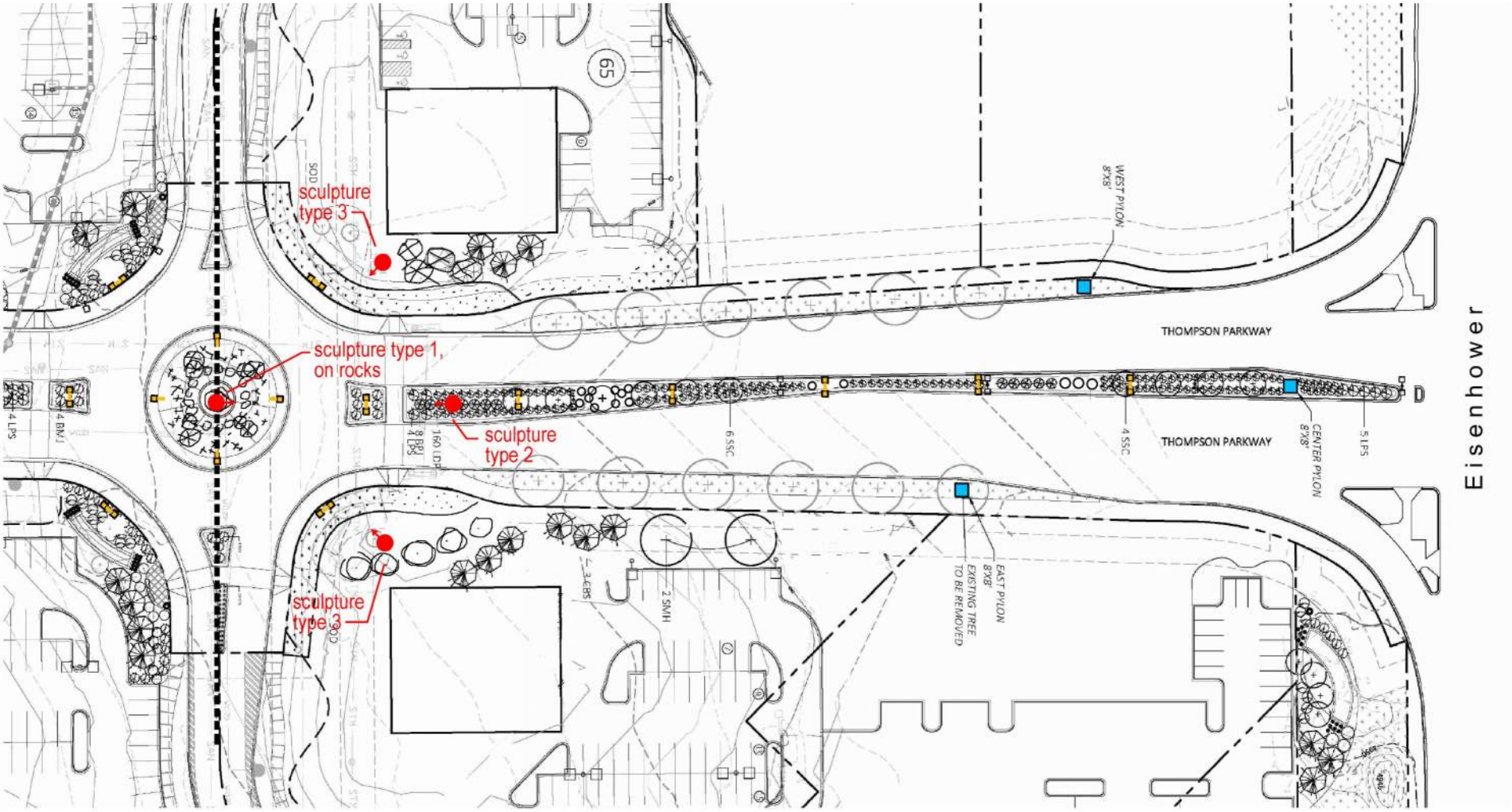

SCULPTURE LOCATION MAP

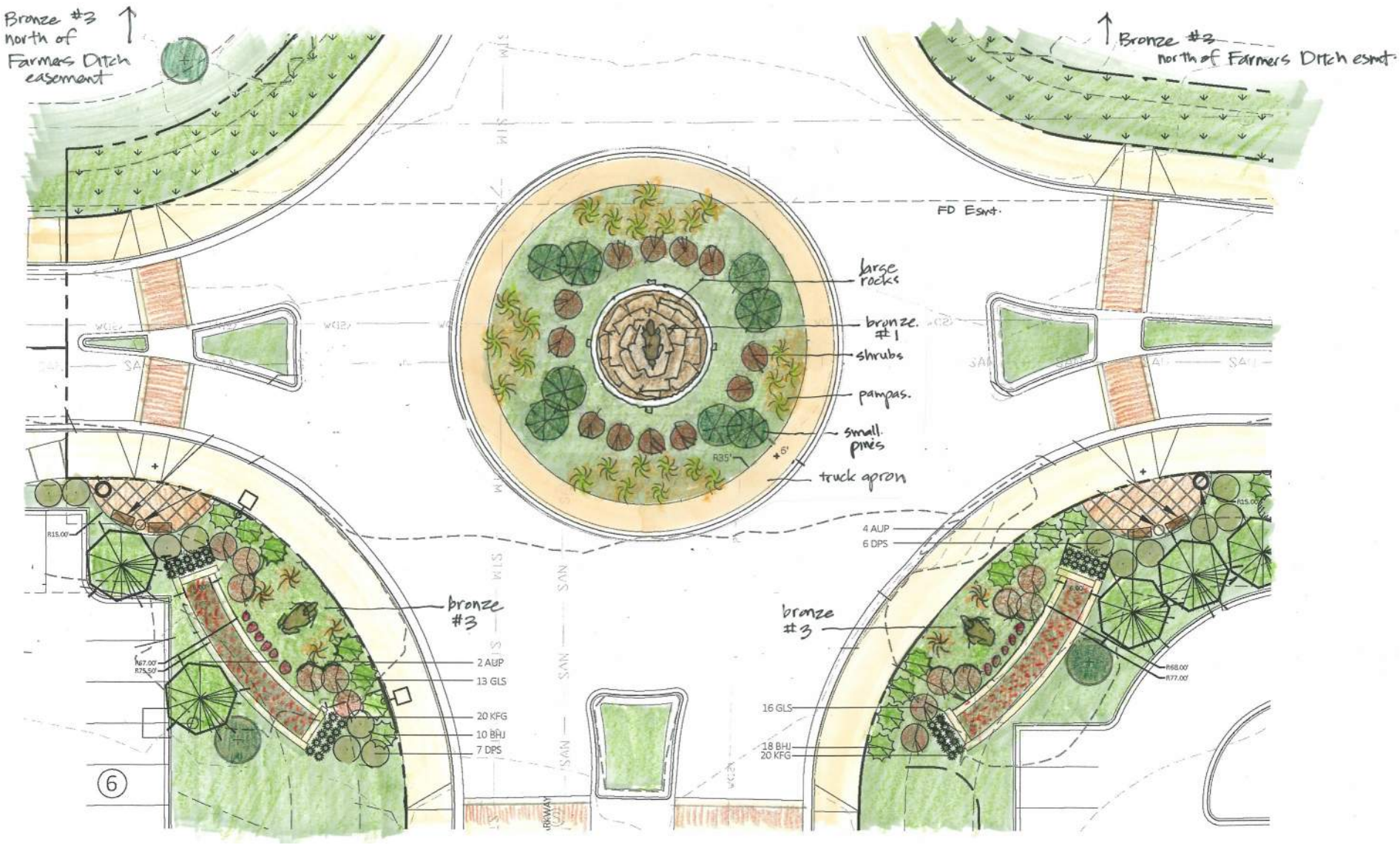

ROUNDABOUT PLAN

1. The central roundabout feature includes a bronze wildlife sculpture on top of a natural boulder mound, with streaming water flowing into a basin. Natural plantings surround the element.

ROUNDABOUT ELEVATION

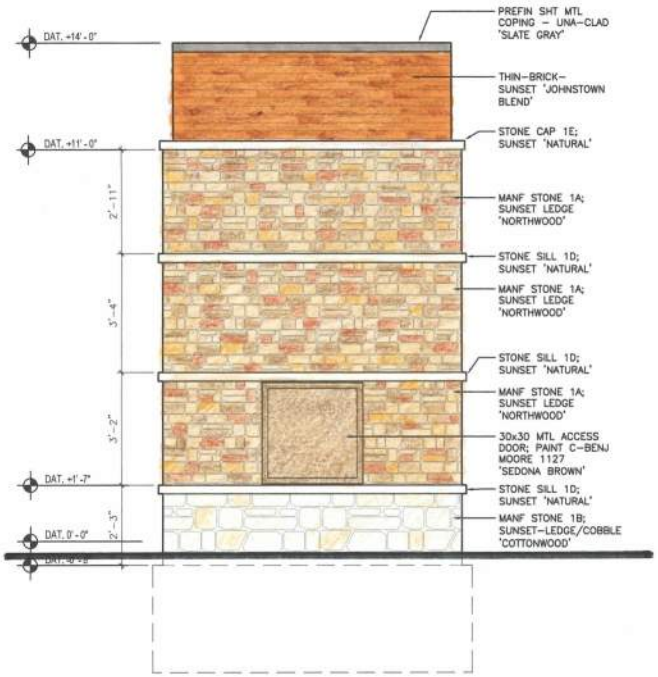
DAT. +14'-0"
DAT. +11'-0"
DAT. +1'-7"
DAT. 0'-0"
2'-11"
3'-4"
3'-2"
2'-3"
PREFIN SHT MTL COPING – UNA-CLAD 'SLATE GRAY'
THIN-BRICK- SUNSET 'JOHNSTOWN BLEND'
STONE CAP 1E; SUNSET 'NATURAL'
MANF STONE 1A; SUNSET LEDGE 'NORTHWOOD'
STONE SILL 1D; SUNSET 'NATURAL'
MANF STONE 1A; SUNSET LEDGE 'NORTHWOOD'
STONE SILL 1D; SUNSET 'NATURAL'
MANF STONE 1A; SUNSET LEDGE 'NORTHWOOD'
30x30 MTL ACCESS DOOR; PAINT C-BENJ MOORE 1127 'SEDONA BROWN'
STONE SILL 1D; SUNSET 'NATURAL'
MANF STONE 1B; SUNSET-LEDGE/COBBLE 'COTTONWOOD'

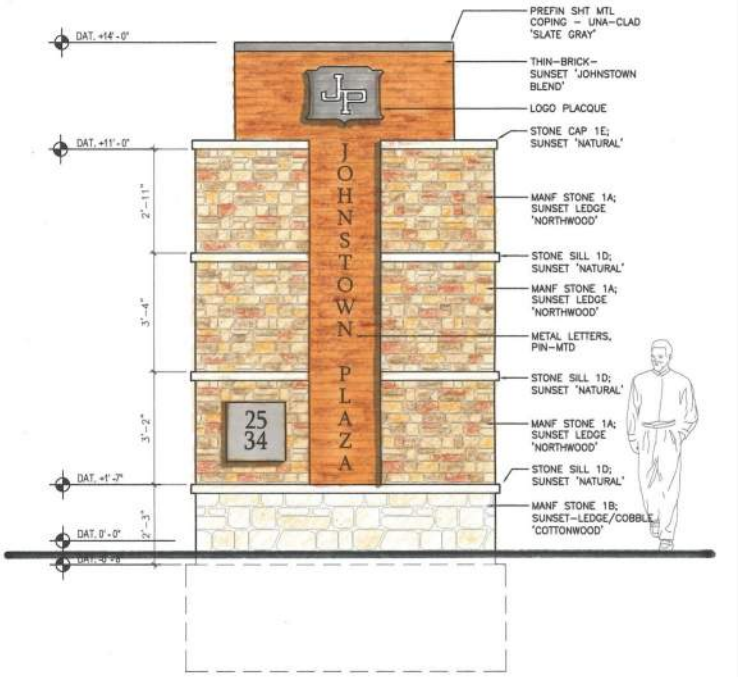
DAT. +14'-0"
DAT. +11'-0"
DAT. +1'-7"
DAT. 0'-0"
2'-11"
3'-4"
3'-2"
2'-3"
PREFIN SHT MTL COPING – UNA-CLAD 'SLATE GRAY'
THIN-BRICK- SUNSET 'JOHNSTOWN BLEND'
LOGO PLACQUE
STONE CAP 1E; SUNSET 'NATURAL'
MANF STONE 1A; SUNSET LEDGE 'NORTHWOOD'
STONE SILL 1D; SUNSET 'NATURAL'
MANF STONE 1A; SUNSET LEDGE 'NORTHWOOD'
METAL LETTERS, PIN-MTD
STONE SILL 1D; SUNSET 'NATURAL'
MANF STONE 1A; SUNSET LEDGE 'NORTHWOOD'
STONE SILL 1D; SUNSET 'NATURAL'
MANF STONE 1B; SUNSET-LEDGE/COBBLE 'COTTONWOOD'
JOHNSTOWN PLAZA
25
34

NORTH KIOSK

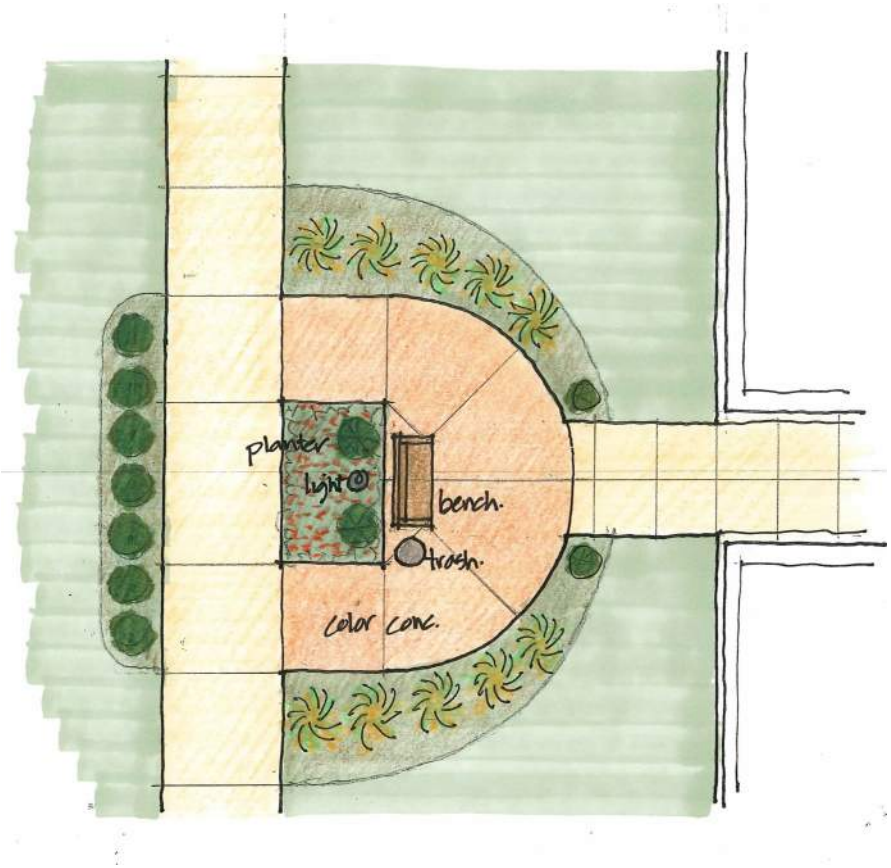

'TERMINUS' COURTYARD

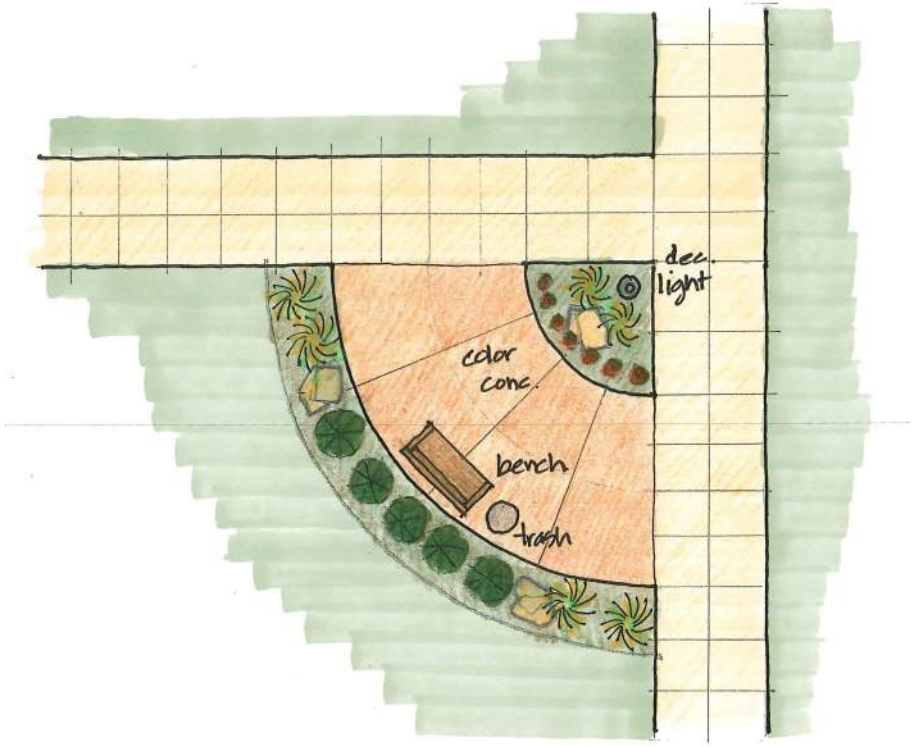

TYPICAL SITTING AREA

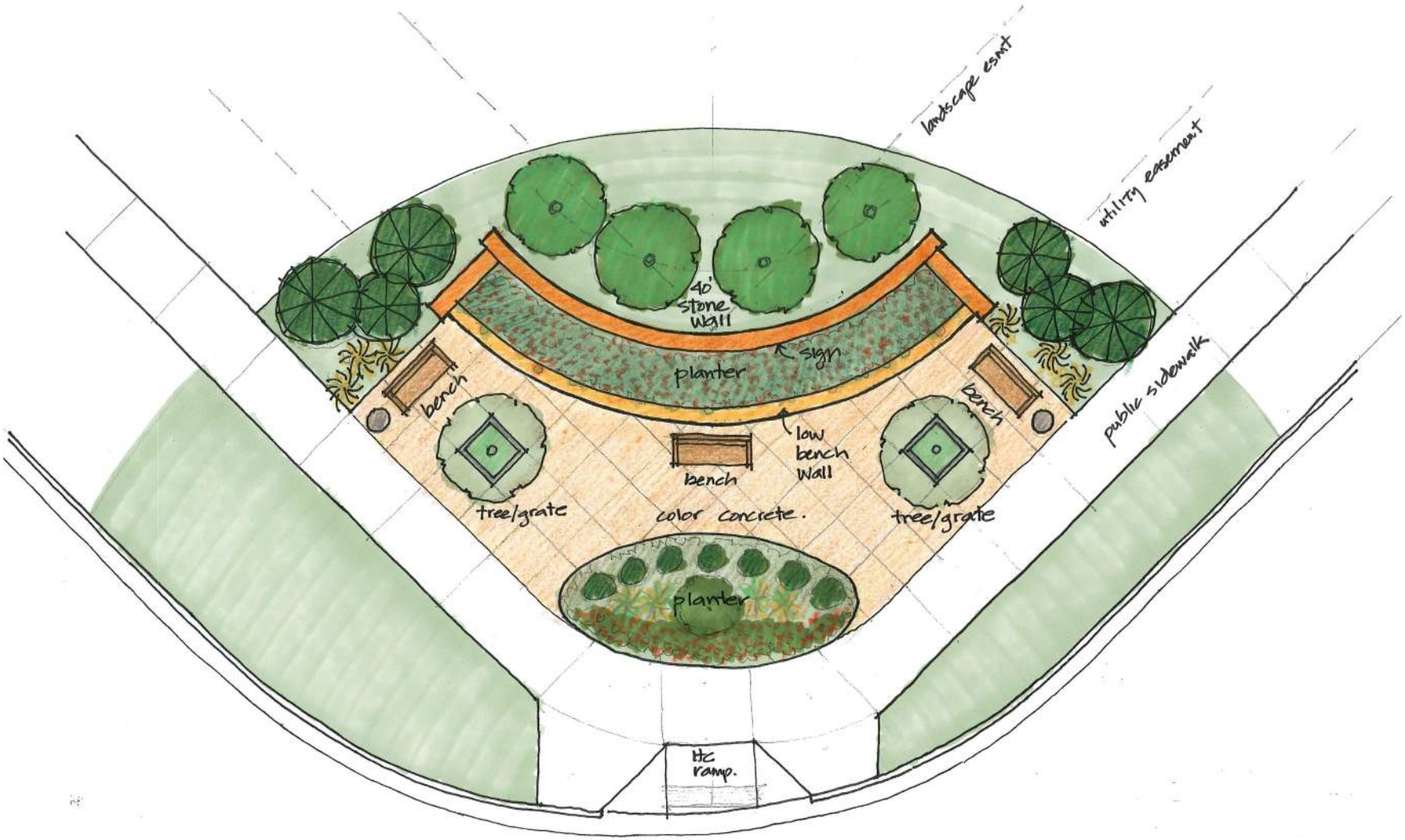

SOUTH GATEWAY

SOUTH GATEWAY

SECTION 4.5 — FLEX OFFICE DESIGN:

4.5.1 Landscaping
4.5.2 Building Design

4.5 Office / Flex

These guidelines apply to: single and multi-tenant office buildings; multi-tenant, single-story structures designed as flexible space for offices, light industrial and professional services; and single-tenant light industrial or research and development type uses. The guidelines contain additional information on landscaping and how to design structures. Requirements regarding the overall design and construction of sites, parking lots, roads, streetscapes, parks, open space areas are included in Overall Development Guidelines and are supplemental to the requirements in this section.

4.5.1 Landscaping

- Exposed sections of building walls that are visible from public areas or high use areas on private property shall have planting beds at least six (6) feet wide along a minimum of 50% of the length of the wall. Provide one (1) tree within 50 feet of the structure for every 50 lineal feet of building face. Exact locations and spacing may be adjusted at the option of the owner to support patterns of use, views, and circulation as long as the overall tree planting minimum requirement is met. The planting beds and trees may be counted towards meeting the requirements for landscaping and buffers described in Section 2 – Overall Development Guidelines.

4.5.2 Building Design

- Compatibility with Existing Development and Site Design
  - The design of new structures in or adjacent to existing developed areas shall be compatible with or complementary to the established architectural character of such areas. Compatibility may be achieved through techniques such as:
    a. Repetition of roof lines.
    b. Use of similar proportions in building mass and outdoor spaces.
    c. Similar relationships to the street.
    d. Similar windows and door patterns.
    e. Building materials with similar colors and textures.
  - Site design for flex uses should incorporate, where possible, central, common service/ loading areas.
- Treat all sides with similar materials.

Example of acceptable use of metal on a building

Example of a building with balanced proportions, varied planes of long walls and coherent architecture style.

- All facades of a building shall have similar materials.
- Materials and Colors
  - Primary facade and roof colors shall have a low reflectance and be a subtle, neutral or earth-toned color.
  - Trim and accents of brighter colors, including primary colors, are allowed. Vivid colors shall be used sparingly (3% or less of a façade).
  - Preferred predominant facade materials include: glazing, brick, native or cultured stone, tinted and textured concrete masonry units, architectural precast concrete panels, site cast tilt-up concrete or stucco. Exposed concrete shall have an attractive texture and/or color.
  - Prohibited predominant materials are smooth-face concrete block, full ceramic walls, and pre-fabricated metal panels. These materials may be used as accent, but shall occupy no more than 30% of a façade. Glazing with reflectivity or opacity higher than 60% is strictly prohibited.
  - Facades that face a street or parking area shall not have a blank, uninterrupted length exceeding 50 feet without including at least two (2) of the following:
    a. Change in plane.
    b. Change in color.
    c. Change in texture or pattern.
    d. Windows.
    e. Columns, piers or equivalent element that subdivides the wall.

- Facades greater than 150 feet in length shall incorporate wall plane projections or recesses having a depth of at least 2% of the length of the facade and occupy at least 20% of the length of the facade.

Example of varied roof planes

- Building Entrances
  - Primary building entrances shall have clearly defined and provide shelter from the sun, wind, rain and snow, and include two (2) of the following:
    a. Canopy, arcade or portico.
    b. Overhang or recess.
    c. Raised corniced parapet.
    d. Peaked roof or arch.
    e. Architectural detail such as columns, tile work, stone or moldings integrated into the building structure.
    f. Integral planters or wing walls and incorporate landscaped areas and/or places for sitting.
    g. Special landscape or site feature.
- Roof and Top Treatments
  - Rooftop mechanical equipment must be non-obtrusive, screened from view or designed to be integral components of the building. Design is subject to DRC and JRC approval.
  - The average parapet height may not exceed 15% of the supporting wall height.
  - Maximum height or any portion of a parapet shall not exceed 1/3 of the supporting wall height.

- Sloping roofs, where they occur, shall range between 4/12 and 12/12 slopes.
- Large sloped roofs must have variations in height or offsets to break up the large plane
  with a maximum 50 linear feet of one plane.

- Accessory Buildings
  - Shall be of the same character and materials as primary buildings.

APPENDIX:

5.1 2534 Master Association Irrigation Guidelines

2534 Master Association Irrigation Guidelines

Preface:

The 2534 Master Association has a non-potable water supply that furnishes water to each lot, for the exclusive use of irrigating the landscape.

The Town of Johnstown requires the use of non-potable water for use in landscape irrigation. It is the intent of the 2534 Master Association to provide non-potable landscape irrigation water to each lot owner. To be able to manage the entire 2534 Non-Potable System efficiently, the 2534 Master Association must have the capability to coordinate non-potable deliveries to end users at the site. The lot owners have the option to have the 2534 Master Association maintain their irrigation and landscape or "opt out" of having their irrigation controlled by the 2534 Master Association, and a "water window" will be assigned to that lot. Each lot will have a specific "point of connection" detail to follow, whether they have the 2534 Master Association control their irrigation or they "opt out". In most instances, lots have been "pre-wired" to connect to the Master Association's controller, thus, the design parameters will be provided by the Master Association. Since irrigation designs and installations can vary, a set of guidelines for materials and application have been developed. This will ensure that the watering schedule and maintenance of equipment will be met throughout the life of the project. This requires some standardization of products, since there are a multitude of manufacturers. This also ensures that each owner will have a "quality" irrigation system, and is designed to the same standards as other users at 2534. Each end user at 2534 will need to go through a two step design review process with the 2534 Design Review Committee (2534 DRC). One of the required submittals at the first review of a project by the 2534 DRC is the proposed landscape plan for a site, which must conform to the 2534 Design Guidelines. The landscape plan submittal shall include the total square footage of irrigated turf and square footage of other landscape material as part of the submittal. Once the landscape plan is approved, the 2534 DRC will provide design parameters to the end user for use in designing the irrigation system for the site including the point of connection to the 2534 non-potable system. The second submittal to the 2534 DRC shall include the irrigation system design for the property including the end user's intent to either opt out of the Master Association's management of the on-site irrigation and landscape maintenance or the intent to have the Master Association manage these services.

As there is a considerable amount of common area to be managed at the site, the Master Association is able to receive very competitive rates for on-site landscape maintenance. If an end user opts out of Master Association management of on-site irrigation and landscape management, that user must conform to the landscape maintenance specifications provided by the 2534 Master Association, or the 2534 Master Association will take over management of the irrigation system and on-site landscape maintenance.

2534 MASTER ASSOCIATION
UNDERGROUND SPRINKLER SYSTEM SPECIFICATIONS

TABLE OF CONTENTS

SECTION 2810:

PART 1: GENERAL

1.01	CONTRACTUAL REQUIREMENTS
1.02	SCOPE OF WORK
1.03	WORK INCLUDED
1.04	QUALITY ASSURANCE
1.05	SUBMITTALS
1.06	ALTERNATE EQUIPMENT
1.07	PRODUCTS

PART 2: EQUIPMENT

2.01	SPRINKLER HEADS
2.02	ELECTRIC CONTROL VALVES
2.03	QUICK COUPLER VALVES
2.04	MASTER VALVE
2.05	METER
2.06	CONTROLLER
2.07	CONTROL WIRING
2.08	VALVE BOXES
2.09	BACKFLOW PREVENTER
2.10	DRIP COMPONENTS
2.11	OTHER COMPONENTS

PART 3: EXECUTION OF WORK

3.01	JOBSITE CONDITIONS
3.02	UTILITIES AND PROTECTION
3.03	OTHER TRADES
3.04	FIELD VERIFICATION
3.05	EXCAVATION
3.06	INSTALLATION
3.07	BACKFILL AND COMPACTION

PART 4: TESTING AND OPERATION

4.01	PROJECT INSPECTION AND TESTING
4.02	OPERATION OF SYSTEM
4.03	CLEANUP AND JOBSITE RESTORATION

PART 5: WARRANTY

5.01	ENACTMENT
5.02	EXCLUSIONS FROM WARRANTY

PART 6: SPARE EQUIPMENT AND CLOSEOUT MATERIAL

6.01	REQUIREMENTS AT SUBSTANTIAL COMPLETION

PART 7: GUARANTEE

7.01	INSTALLER'S ASSURANCE OF COMPLIANCE

UNDERGROUND IRRIGATION SYSTEM

PART 1: GENERAL

1.01 CONTRACTUAL REQUIREMENTS

A. Design, approval, and installation of an automatic underground irrigation system, using the 2534 Master Association's non-potable water system.

1.02 SCOPE OF WORK

A. The work shall consist of installing a new automatic underground irrigation system, to tie into the existing 2534 Master Association's system. Included will be the design, provision, and installation of all labor, equipment, tools and materials necessary for the construction of an irrigation system per the 2534 Master Association's guidelines. This includes any miscellaneous incidental material required to result in a complete and operable system.

1.03 WORK INCLUDED

A. Work under this Section to include provision of all labor, material, permits, and services needed to complete the underground sprinkler system in accordance with the details and specifications herein.

1. Provide and install all incidental equipment from the point of connection as required on the drawings.
2. Provide and install subsurface sleeves as required.
3. Provide and install miscellaneous incidental equipment which may not be indicated on the details but which is required to result in a complete and operable system.

1.04 QUALITY ASSURANCE

A. Comply with the following codes, ordinances, regulations, and standards in effect at time of installation:

1. American Society for Testing and Materials (ASTM).
2. National Plumbing Code (NPC)
3. Federal Specifications (FS)
4. Plastic Pipe Institute (PPI)
5. National Electric Code (NEC)
6. National Sanitation Code (NSC)
7. All cut-sheets, catalogs, and published data of the manufacturers whose equipment is scheduled for use under this contract.

B. Failure to be familiar with any requirement shall not preclude installer's responsibility to abide by them.

C. In the event of a conflict between requirements the most stringent requirement will prevail in any case.

D. All work under this Section shall be performed by qualified personnel who have successfully completed comparable projects previously, and who are knowledgeable and familiar with irrigation system hydraulics.

1. On-site personnel shall be capable of determining feasibility of proposed installations (with regard to hydraulics). Failure to be familiar with hydraulic feasibility will not preclude installer's responsibility for accidental or deliberate installation of incompatible equipment, pipe sizes, etc., which do not permit operation of system as intended by design.

2. The installer shall field verify static pressure at the point of connection and determine its suitability prior to commencing any work downstream of the point of connection. The point of connection shall be a 1-1/4" threaded gate valve stubbed into the property, unless otherwise noted, or required by the 2534 Master Association.

a) Failure to test and verify adequate static pressure prior to constructing the sprinkler system shall not relieve the installer to provide the adequate operating pressure to provide coverage as intended by their design.

b) It is the installer's responsibility to report inadequate static pressure to the Project Inspector and to correct the problem prior to commencing work downstream of the point of connection.

E. All material for use under this Section to be new and previously unused.

F. The installer shall be responsible for measuring and verifying accuracy of field dimensions versus drawing dimensions. All discrepancies shall be reported to the Project Inspector and resolved prior to commencing work.

1.05 SUBMITTALS

Each end user must get the 2534 DRC approval of a landscape plan and an irrigation plan for a site prior to commencement of installation of an irrigation system or landscape. The irrigation plan is to be part of the second submittal to the 2534 DRC. It shall include an estimated annual water usage chart, showing the valve I.D., the discharge rate, the irrigated area (in square feet), the precipitation rate (inches/hour), the average annual usage showing both the depth (in inches), and the volume (in gallons). Attached to these specifications, is Attachment A, a guideline chart for plant material water usage, and Attachment B, a table for use in calculating the water usage.

A. Three (3) sets of submittals of the specifications of the products to be used for the irrigation system as described, shall be transmitted to the 2534 DRC for approval, before commencement of work. Upon review and final approval by the 2534 DRC, according to these specifications, commencement of the irrigation system may begin. A 2534 DRC approved copy of the submittals will be transmitted to the contractor.

C. Shop Drawings which clearly indicate changes proposed by the installer to pipe routing, sprinkler head placement, valve placement, zone sequencing, etc., which improve operation and serviceability of the system are to be submitted to the 2534 DRC.

D. Other submittals shall be made in accordance with the contract documents and Requirements at Substantial Completion under this Section.

1.06 ALTERNATE EQUIPMENT

A. Generally, only the equipment in these specifications will be considered or accepted for installation, and shall take precedence over plan details.

1. If the specified equipment is discontinued by the manufacturer at the time of installation, alternate equipment may be proposed and submitted, and noted by exception.

a. Proposed alternate equipment shall be submitted to the 2534 Master Association in the form of additional catalog cut sheets, and an amended irrigation design, with revisions clearly marked, indicating any changes proposed for equipment, and the resulting changes to the estimated gallons-per-minute per zone, pipeline sizes, and water usage chart.

2. Should alternate equipment be installed without prior Owner approval, Final Acceptance of work provided under this Section may be delayed and/or denied.

1.07 PRODUCTS

A. Furnish all equipment to complete the sprinkler system per the approved Drawings and Specifications.

B. Rainbird and Hunter products are to be used whenever practicable.

C. All mainline piping shall be PVC, Class 200, minimum.

D. All lateral piping shall be PVC Class 160 minimum, or Polyethylene, NSF, 80 p.s.i. minimum.

1. All piping shall be new and NSF approved.

E. All mainline pipe fittings under 2.5" diameter shall be Solvent Weld type. All mainline pipe fittings 3" and larger shall be Ductile Iron, deep bell, push -on gasket type, thrust blocked according to manufacturer's recommendations. All polyethylene lateral fittings shall be insert type, with crimp type clamp for sealing, and conform to ASTM D-2609.

1. Gasket PVC mainline pipe shall meet ASTM requirements.

2. BE PVC lateral pipelines shall meet ASTM requirements.
3. Polyethylene lateral pipelines shall meet ASTM requirements.
4. Solvent weld for PVC pipe shall meet ASTM requirements.
5. Teflon tape shall be used on all threaded joints.
6. The use of cross type fittings is not permissible.

F. All sprinkler heads will be installed with swing pipe or swing joints.

G. Copper tubing and fittings shall be type 'K'.

H. PVC sleeves to be Class 200 PVC BE of the size and length indicated on the Drawings. Low voltage wiring that is not routed with the mainline shall be run in separate sleeves from mainline or lateral pipe.

PART 2: EQUIPMENT

2.01 SPRINKLER HEADS

A. All sprinkler heads shall be Rainbird or Hunter.

1. Nozzle types and arcs to be provided by the irrigation designer, and indicated on the Drawings to satisfy the coverage requirements intended by the design.
2. Sprinkler nozzles installed on any single zone shall have matched rates of precipitation.

B. Sprinkler heads shall be of the type, and size, indicated on the Drawings.

C. Watering windows will be assigned for each lot that is NOT controlled by the 2534 Master Association. It is recommended that all sprinkler heads utilized for turf grass in the entire Development provide a precipitation rate of at least .4" per hour, to ensure that all lots will be watered in a timely manner, and water windows will be met.

2.02 ELECTRIC CONTROL VALVES

A. Electric control valves shall be Hunter ICV Filter Sentry series or Rainbird PESB series, for use on non-potable irrigation systems.

1. Each electric control valve shall be installed with a PVC isolation ball valve at the inlet.
2. If the owner wishes to utilize the 2534 Master Association controller, Rainmaster model TW-D-X decoders are required.

B. Drip valves must have pressure regulation and wye strainers. Rainbird model XCZ-100B-COM or Hunter model ICZ-101are recommended.

2.03 QUICK COUPLING VALVES

A. Shall be Rainbird model 5LRC, or Hunter model HQ5LRC.

2.04 MASTER VALVE – HUNTER

A. All mainlines that are <u>not</u> utilizing the Master Association's irrigation control system shall install a Hunter model ICV valve to be used as a master valve. It shall be installed immediately downstream from the point of connection gate valve, and before the flow meter, of the size and type shown on details. It shall be connected by the 2534 Master Association, to their irrigation controller, to control the "water window" for the site.

2.05 METER

A. All irrigation systems in the 2534 Development are required to be metered. An Amco water meter model C-700 with pit pad for remote reading and totalizing register is required.

B. Installation is per 2534 Development details (provided).

2.06 AUTOMATIC CONTROLLER

A. The 2534 Master Association utilizes a Rainmaster 2-wire central control system in most instances. Only construction before September 2007 utilized a more traditional, multi wire system. Please verify the type of controller that will be controlling your lot. All irrigation controllers provided by the Master Association after September 2007 will require that the valves utilize a Rainmaster decoder model TW-D-X.

B. An irrigation schedule and "mow day" schedule is required to be submitted upon completion, for any irrigation system utilizing the 2534 Master Association irrigation controller.

C. If the owner is providing their own controller, it shall be multi-program capable, and have a rain sensor attached.

2.07 CONTROL WIRING

A. All irrigation systems utilizing the 2534 Master Association irrigation controller shall use Rainmaster TW-CAB-14 wire for 2-wire connection, and install per manufacturer's recommendation. Contact the 2534 Master Association to verify that your lot is wired for a 2-wire system.

B. All other irrigation systems that are NOT utilizing the 2534 Master Association irrigation controller shall provide and install type UF 600 volt stranded or solid copper, single conductor wire with PVC or PE insulation and bearing U.L. approval for direct underground burial, minimum 14 gauge.

1. Control wire shall be a red color.

1. Common/ground wire color to be white.

2. Master Valve wire color to be black.

3. Two yellow wires shall be installed along entire mainline as an extra wire.

4. Wire colors to be clearly indicated on the as-built Drawings.

C. Installer is responsible for sizing all wire in accordance with recognized practice, and shall clearly indicate changes in wire sizes on as-built Drawings.

D. All wire connections utilizing the 2-wire 2534 Master Association controllers are to be made with Rainmaster TW-SPLICE, 3M DBY, or other NEC approved waterproof wire connection.

E. All wire connections NOT utilizing the 2534 Master Association controller shall be made with SURESPLICE SK 8-12G or 3M DBY splices or approved equal.

2.08 VALVE BOXES

A. All electrical control valves are to be housed in control valve boxes with lock equipped covers equal to Armor 170106 (standard). Isolation gate valves and wire connections to be housed in Armor 181104 (10" round box), and drip valves shall be housed in Armor 190106 (jumbo box).

1. Valve boxes shall be adequately sized to allow clearance around all valves for servicing and removal without excavation of box, and shall have a 2" clearance from piping.

2. Valve boxes and covers shall be green in color and stamped "Irrigation Control Valve".

B. All control valves to be installed in accordance with final grade.

1. Aggregate sumps to be constructed prior to installation of control valve and box; do not attempt to fill valve boxes with aggregate.

2. Valve box interiors to be completely free of standing water, mud, or other debris at all times.

C. Provide and install manufactured valve box extensions as needed to result in box cover being at adjacent finish grades, or flush with top of mulches.

2.09 BACKFLOW PREVENTER

A. Not applicable, as the irrigation supply is raw water.

2.10 DRIP COMPONENTS

A. Lateral drip tubing from the valves shall be of a UV resistant type.

B. Install emitters on lateral drip tubing. Use ¼" distribution tubing to distribute water to plants. Install tubing stake and bug cap at each outlet.

C. Emitters shall be of a pressure compensating type, Rainbird model XB-10 series, 1 gallon per minute. Install emitters according to the following table:

Deciduous trees – single or multiple outlet emitters, totaling 5 i.e., for trees planted in bed areas. Separate zoning for trees planted in turf areas is not required.

Coniferous trees - – single or multiple outlet emitters, totaling 4 g.p.m., for trees planted in bed areas. Separate zoning for trees planted in turf areas is not required.

Shrubs – 2 single outlet emitters required for each plant.

Perennial, ground cover, and grass plants – 1 single outlet emitter required for each plant.

2.11 OTHER EQUIPMENT

A. Other equipment to be provided and installed, including but not limited to, pressure regulating valves, air relief valves, and equipment needed to result in a complete and operable sprinkler system shall be provided and installed under this Section.

1. Installation of other equipment shall be as indicated on Drawings, and per manufacturer's recommendations.

PART 3: EXECUTION OF WORK

3.01 JOBSITE CONDITIONS

A. The installer shall be completely familiar with all jobsite conditions which may affect the work prior to commencing any work under this Section.

1. No work shall be commenced until unsatisfactory jobsite conditions have been brought to the Project Inspector's attention or otherwise totally resolved.

2. Should the installer fail to resolve jobsite conditions which may negatively affect the work under this Section, he shall assume responsibility for subsequent additional work and costs to resolve unsatisfactory jobsite conditions.

3.02 UTILITIES AND PROTECTION

A. Prior to commencing any work under this Section, it will be this installer's responsibility for scheduling and coordinating the locations of all existing utilities on the jobsite which may affect the work.

1. All known existing utilities shall be clearly indicated on field drawings, and shall be flagged or otherwise marked on the jobsite.

2. Failure to locate existing utilities and provide adequate protection to them during the work shall not preclude responsibility for subsequent damage.

3. Costs for repair to existing utilities as a result of failure to properly locate and protect utilities shall be this installer's responsibility.

4. "Utility " shall include, but may not be limited to gas, electric, sewer and water, telephone, and cablevision lines.

3.03 OTHER TRADES

A. This installer shall make all reasonable efforts to coordinate work of other trades to avoid damage to work installed under this Section.

B. Work under this Section shall be coordinated with other trades so as not to willfully interfere with scheduled installations.

1. It is this installer's responsibility to be familiar at all times with scheduling of certain trades which may have a direct affect on work under this Section (i.e. pavement, plumbing, electrical) and to coordinate work under this Section with work of other trades.

3.04 FIELD VERIFICATION

A. All sprinkler heads, control valve locations, and pipe line locations to be installed are to be flagged prior to commencing excavation.

1. Minor relocation of equipment which facilitates the installation, serviceability and operation of the irrigation system may be made and documented on as-built Drawings.

B. Sprinkler heads which are adjacent to curbing and pavement are to be installed no closer one inch away from curbing/pavement to accommodate turf trimming operations.

3.05 EXCAVATION

A. This installer shall provide all necessary excavation required for proper installation of work under this Section.

B. Mechanical trenchers used for excavation shall be capable of digging smooth, flat bottom trenches regardless of slope conditions.

C. Trenches for mainlines shall be excavated to a uniform depth not less than eighteen inches.

D. Trenches for lateral pipelines shall be excavated to a uniform depth not less than twelve inches.

E. Sumps for manual drains and control valves shall be over-excavated to facilitate valve installation.

F. Sleeves crossing beneath parking lots, driveways, roadways, and sidewalks shall be installed to the depth of not less than eighteen inches to the top of the sleeve pipe.

G. Sleeves crossing beneath sidewalks shall be installed to depth indicated on Drawings prior to installation of pavement.

1. Control wiring may not be installed in mainline sleeves.

3.06 INSTALLATION

A. All installations are to be made in full accordance with the Drawings, Specifications, Local Codes and Ordinances, etc., with the most stringent requirement prevailing at all times in the event of conflict.

1. Generally, no deviations from the layout of pipelines, sprinkler heads, control valves, point of connection, controller locations, or other scheduled installations will be considered or accepted by the Project Inspector from that indicated on the Drawings.

2. The installer is authorized to make minor field adjustments in layout to facilitate minor changes in site layout.

B. No direct contact between any equipment installed under this Section and other utilities or structures is permitted.

C. Open pipe ends are to be taped or plugged closed at all times to keep out dirt and debris during installation.

D. All piping is to be flushed with clean water to remove all dirt and debris prior to installing sprinkler heads.

E. Swing joint risers to be installed and adjusted to result in all sprinkler heads being flush and plumb with finish grades prior to backfilling around heads.

1. No sprinkler head is to be pulled into a plumb and flush position after installing backfill.

F. Electric control valves are to be connected to mainline per the Drawing detail allowing clearance for servicing valve in valve box.

1. Control valves are to be adjusted for optimum flow to provide coverage as intended by design.

G. All control wiring is to be installed in the mainline trench. If control wiring is not installed in the mainline trench, it must be installed in appropriately sized conduit.

1. No splices are to occur in any sleeve.

2 Splices must be made in boxes.

3. Multiple wires in trenches are to be banded together at twenty foot intervals.

4. Two sparc wires for system expansion shall be pulled to the end-points of the mainline.

5. All wire connections utilizing the 2-wire 2534 Master Association controllers are to be made with Rainmaster TW-SPLICE, 3M DBY, or other NEC approved waterproof wire connection.

6. All wire connections NOT utilizing the 2534 Master Association controller shall be made with SURESPLICE SK 8-12G or 3M DBY splices or approved equal.

H. Other equipment installations are to comply with the following requirements:

1. Quick coupling valves are to be installed on swing joints with SCH 80 PVC nipples, and are to be installed in an Armor 181104 (10" round box), plumb and one inch below the bottom of the lid.

a) Quick coupling valves shown next to a control valve on the drawings shall be installed in a separate valve box.

J. Other equipment, miscellaneous products, fittings, etc., which are not specifically indicated on the Drawings but which are required to result in a complete and operable system are to be provided and installed under this Section within the base contract.

3.07 BACKFILL AND COMPACTION

A. Provide clean backfill soil free of clods and rocks greater than one inch in size, and debris that could puncture and damage pipelines and equipment installed under this Section.

B. Backfilling to be done when pipelines are cool to avoid excessive contraction. Water puddling of trenches is acceptable.

C. Open trenches and other excavations are to be backfilled with suitable material and compacted to not less than ninety percent density in six inch increments.

1. After compaction, backfill shall be precisely flush with surrounding finish grades.

D. The installer is responsible for the repair to damaged equipment, finish grades, undermined pavements, sod, mulches and underlayments, etc., from settling of one inch or more in any trench or excavation as a result of work under this Section for a period of not less than one year from date of final Acceptance.

PART 4: INSPECTION, TESTING AND OPERATION

4.01 INSPECTIONS AND TESTING

A. An open trench inspection, upon completion of mainline installation, shall be performed by the Master Association. It shall include a visual inspection of the components installed, to verify compliance with the approved design and the materials installed.

1. The installer shall contact the Project Inspector, and shall give two days notice that an inspection for mainline installation is requested.

B. The installer shall activate the water source and pressurize the mainline to not less than 100 psi, or maximum available pressure if less than 100 psi.

1. The mainline shall remain closed and pressurized for not less than 1 hour prior to operation of the completed system.

B. After successful completion of the pressurized period and repair to any leaks, and the system can be operated at the pressure intended by design, the installer shall adjust and fine tune all equipment for optimum performance and coverage as intended by design.

1. When wind conditions are less than five mph, the installer shall adjust all sprinkler head nozzles to provide coverage to areas as intended by design. Overspray onto sidewalks is permitted by design.

Overspray onto fences shall be avoided wherever possible. No overspray is permitted onto roadways or structures.

2. All sprinkler heads are to be fully adjusted to be plumb and flush prior to sodding, seeding, and mulching operations are commenced.

   a) This installer shall assume all liability for sodding, seeding, and mulching which is installed prior to adjustment, fine tuning, and functional operation of the sprinkler system.

   b) This installer shall assume all liability for manually operating the sprinkler system and for furnishing supplemental irrigation to sustain optimum condition of all landscaping should the system not be fully operable prior to installation of landscaping.

C. After the installer has verified that all adjustments and fine tuning have been adequately performed, the Project Inspector shall be given two days notice that inspection for Substantial Completion is requested.

   1. The entire installed system shall have been allowed to operate automatically via the controller through entire cycles prior to requesting an inspection.

D. The Project Inspector's inspection for Substantial Completion shall include visually observing the operation of all work provided and installed under this Section.

   1. Any installation which does not comply entirely with any part of this Section will be documented in a written punch list.

   2. All punch list items are to be completely corrected by the installer prior to re-inspection by Project Inspector.

      a) Re-inspection for correction of punch list items for consideration of Final Acceptance will be made within five working days from date of Project Inspector's first inspection and punch list.

4.02 OPERATION OF SYSTEM

A. The installer is responsible for initial programming of controller to operate automatically at the frequency he deems necessary to promote and sustain vigorous growth of all landscaped areas to which this irrigation design provides coverage.

B. It is the responsibility of the installer to provide to the Master Association a written schedule for watering and mow days, for incorporating into the Master Association's watering schedule.

C. Unless otherwise approved by the Project Inspector, the operating sequence of all zones shall be per the Drawings.

D. During and up until Final Acceptance, the installer is responsible for making any adjustment that may be required to equipment installed under this Section.

4.03 CLEANUP AND JOBSITE RESTORATION

A. Prior to Final Acceptance, all areas on the jobsite in which work under this Section has occurred shall be thoroughly cleaned of dirt, unused material, and the installer's installation equipment.

B. Work by other trades which is damaged or destroyed as a result of work under this Section shall be fully restored by this installer as a condition of Final Acceptance.

   1. Sod, trim edges, mulches, pavements, and other existing work which is damaged as a result of work under this Section is to be completely restored as a condition of Final Acceptance of all work completed under this Section.

PART 5: WARRANTY

5.01 ENACTMENT

A. A one year warranty for all material and workmanship provided under this Section shall commence on the date of Final Acceptance of all work.

B. During the warranty period, the installer is responsible for all the following:

   1. Winterization; shut off all water sources to system, drain all pipelines, and provide air injection as required to prevent freeze damages to all equipment.

2. Activation; turn on all water sources to system, charge all pipelines, repair damaged equipment not caused by vandalism, snow removal, or unauthorized winter-use of system (charges may be incurred), adjust and fine tune all equipment to provide optimum performance.

3. Controller programming; it is the responsibility of the installer to provide a written program for the controller, at frequencies deemed necessary to promote and sustain establishment of landscaping at time of Final Acceptance.

   a) It is this installer's responsibility to shut down the controller at winterization and re-program controller at time of activation, if the site is controlled by a private controller.

   b) It is this installer's responsibility to perform seasonal service at the time he deems appropriate to protect his warranty interests.

   c) The installer is responsible for damages caused to equipment installed under this Section as a result of his failure to provide seasonal maintenance at the appropriate times.

   d) The installer may be back charged if the services of others must be employed to perform seasonal maintenance, as determined necessary by Project Inspector.

C. During the warranty period, the installer is responsible for providing labor and material as needed to keep the system completely operable as intended by design.

   1. Equipment which fails to operate as intended by design shall be repaired and/or replaced by the installer.

   2. Equipment which is removed from the system for repair shall be replaced immediately with equal equipment capable of providing uninterrupted operation of the system as intended by design.

D. Should at any time during the warranty period the installer fail to repair/replace equipment after being given reasonable notice from Owner to do so, he may be back charged for any costs incurred by the Owner for needed repairs which must be made by others.

5.02 EXCLUSIONS FROM WARRANTY

A. The following do not constitute valid warranty claims:

   1. Vandalism to equipment.

   2. Damage to the installed system as a result of work by others in the work area after Final Acceptance.

PART 6: SPARE EQUIPMENT AND CLOSEOUT MATERIAL

6.01 REQUIREMENTS AT SUBSTANTIAL COMPLETION

A. At Project Inspector's inspection for Substantial Completion the installer shall provide Project Inspector with all of the following:

   1. One set of reproducible As – Built drawings.

   2. A written schedule for watering and mow days, for incorporating into the Master Association's watering schedule.

   3. (1) spare sprinkler head bodies and nozzles of each type installed.

   4. (1) spare valve keys for drain valves installed.

   5. (1) quick coupling valve keys suitable for use with valves installed.

   6. (1) swivel hose bibs suitable for use with quick coupling valves installed.

   7. (2) spare controller cabinet keys.

      a) All spare equipment to be new and unused.

      b) All spare equipment to be provided in a new, sealed cardboard box clearly labeled with the job name and "Spare Irrigation Equipment. " Valve keys may be securely taped to outside of box.

B. Provision of required spare equipment and closeout material in the format specified above is to occur at inspection for Substantial Completion.

PART 7: GUARANTEE

7.01 INSTALLER'S ASSURANCE OF COMPLIANCE

A. Upon entering an Agreement to provide labor and material to complete all work described under this Section the installer hereby guarantees to the Owner and the Project Inspector that he will execute to the best of his ability all provisions required under this Section.

1. The installer shall not qualify any term, condition, or requirement stated herein at any time during or after completion of the Agreement to provide work under this Section.

2. The installer may have certain rights pertaining to this guarantee as described in the General Conditions of the Agreement between the Owner and installer.

Attachment A

A Guide to Landscape Water Requirement Categories

(These are potential landscape water requirement categories, including some common plants. Categories are based on inches of supplemental water necessary per watering season.)

Turf grass

High Water Use: 24"/season Kentucky Bluegrass, Perennial Ryegrass

Moderate Water Use: 16"/season Turf-type Tall Fescue

Low Water Use: 5"/season Buffalograss, Blue Grama

Plantings

High Water Use: 20"/season

Trees Birch, Cottonwood, Fir, nonnative Maple, Willow

Shrubs Hydrangea, Quince, Willow, Yew

Perennials Cardinal Flower, Fern, Foxglove, Hosta, Meadow Rue

Moderate Water Use: 14"/season

Trees Aspen, Austrian Pine, Blue Spruce, Crabapple, Mountain Ash, Honeylocust, Linden, English or Red or White Oak, Redbud, Tatarian Maple

Shrubs Cranberry Viburnum, Winged Euonymus, Honeysuckle, Lilacs, Potentilla

Perennials Ajuga, Bishop's Weed, Bleeding Heart, Bugleweed, Hardy Chrysanthemum, Columbine, Coral Bells, Iris, Lupine, Peony, Periwinkle, Shasta Daisy

Low Water Use: 8"/season

Trees Bigtooth or Rocky Mountain Maple, Bristlecone or Ponderosa Pine, Golden Raintree, Green Ash, Kentucky Coffeetree, Rocky Mountain Juniper, Russian Hawthorne, Western Catalpa, Western Hackberry

Shrubs American Plum, Bluemist Spirea, Spreading Cotoneasters, Golden Currant, Grape Holly, Littleleaf Mockorange, Mugho Pine, Potentilla, Shrub Rose, Siberian Peashrub

Perennials Basket-of-Gold, Coreopsis, Candytuft, Daylilies, Dianthus, Harebell, Himalayan Border Jewel, Lamb's Ear, Perennial Statice, Primrose, Sweet Woodruff

Very Low Water Use: 4"/season

Trees Amur Chokecherry, Bur Oak, Canyon Maple, Pinyon Pinc

Shrubs Apache Plume, Buffaloberry, Junipers, Mexican Cliffrose, Mountain Mahogany, New Mexican Privet, Rabbitbrush, Russian Sage, Sand Cherry, Saskatoon Serviceberry, Three-leaf Sumac, Yucca

Perennials Blue Flax, Cacti, Gaillardia, Gayfeather, Hardy Ice Plant, Poppy Mallow, Prairie or Purple Coneflower, Pussytoes, Penstemon, Sedum, Snow-in-Summer, Sulfur Flower, Woolly Thyme, Yarrow

Attachment B

Annual Water Use Chart (Instructions)

1. Use the Water Use Chart below, including notes, as an example of what the 2534 Design Review Committee requires to be included on an irrigation plan.
2. The discharge figures for each lateral can be calculated by summing the appropriate discharge values in the manufacturer's catalogs for the specified sprinklers, bubblers or drip emitters.
3. Irrigated areas for each lateral can be calculated using a scale and/or plan meter. This should be a "best estimate" splitting areas between zones as necessary. For drip irrigation, the irrigated area should approximate the area actually wetted by the emitters. As a general guideline, you can use one square foot for each perennial, four square feet for each shrub and twelve square feet for each tree.
4. To calculate precipitation rate (inches per hour), multiply the discharge (gallons per minute) times the conversion factor of 96.26, and then divide by the irrigated area (square feet).
5. The average annual depth of irrigation can be determined by referring to Attachment A.
6. The annual volume of water (gallons) can be determined by multiplying the irrigated area (square feet) by the average annual depth of irrigation (inches), and then dividing by the conversion factor 1.6.

Water Usage chart (example)

Valve I.D.	Discharge rate (g.p.m.)	Irrigated square footage	Avg. Precipitation rate (in./hr.)	Average Annual Irrigation	
				*Depth (in.)	Volume (gal.)
#1	40.00	7550	0.51	24	113247
#2	26.00	5562	0.45	24	83425
#3	19.00	1076	1.7	24	16138
#4	7.50	802	0.9	8	4011
* refer to Attachment A				**Total gallons**	**216821**

NOTES FOR PRIVATE IRRIGATION SYSTEMS UTILIZING WATER ONLY:

1. ALL PRIVATE IRRIGATION SHALL BE METERED, ACCORDING TO THE ATTACHED DETAIL.
2. THE MAXIMUM FLOW RATE FOR IRRIGATION DESIGN PURPOSES IS 35 GPM, UTILIZING THE 1-1/4" P.O.C. PROVIDED. CONTACT THE METRO DISTRICT FOR THE LOCATION.
3. ALL PRIVATE IRRIGATION SYSTEMS UTILIZING ONLY THE WATER (NOT THE CONTROLLER SYSTEM) SHALL INSTALL A HUNTER ICV 151G-FS-AS MASTER VALVE, ACCORDING TO THE DETAIL, FOR USE BY THE METRO DISTRICT.
4. ADDITIONAL WIRES AT THE P.O.C. ARE FOR USE BY THE METRO DISTRICT.

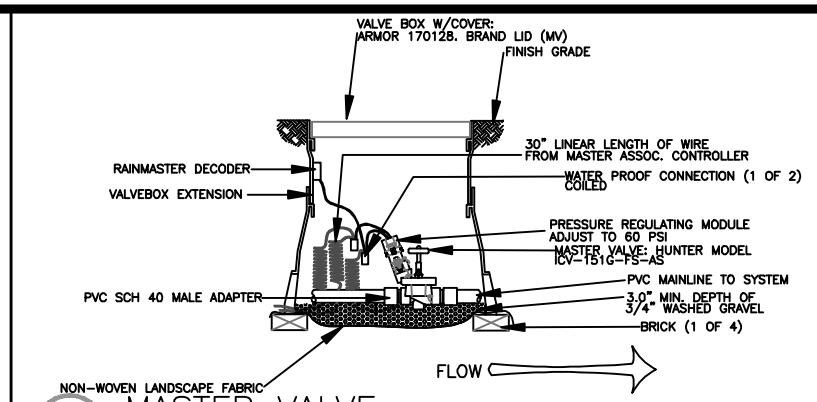

1 MASTER VALVE ASSEMBLY 11/15/2007 N.T.S.

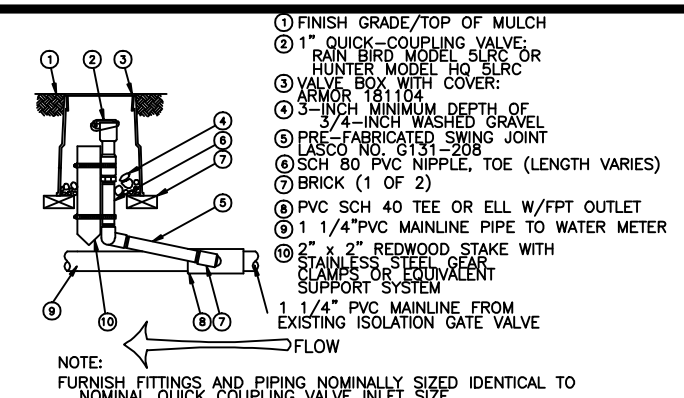

2 QUICK COUPLER VALVE ASSEMBLY 11/15/2007 N.T.S.

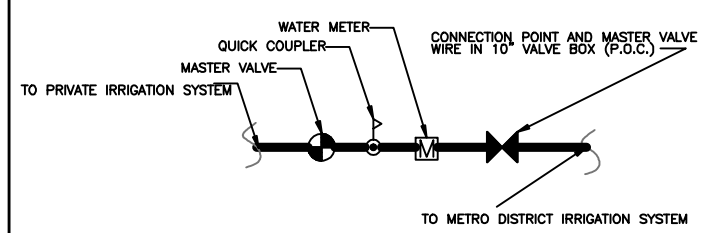

3 PRIVATE CONNECTION ASSEMBLY PLAN VIEW 11/15/2007 N.T.S.

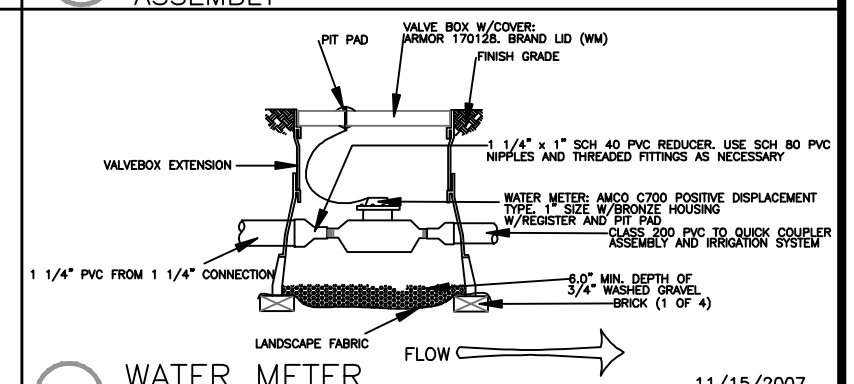

4 WATER METER ASSEMBLY 11/15/2007 N.T.S.

NOTES FOR PRIVATE IRRIGATION SYSTEMS UTILIZING WATER AND METRO DISTRICT CONTROLLER:

1. ALL PRIVATE IRRIGATION SHALL BE METERED, ACCORDING TO THE ATTACHED DETAIL.
2. THE MAXIMUM FLOW RATE FOR IRRIGATION DESIGN PURPOSES IS 35 GPM, UTILIZING THE 1-1/4" P.O.C. PROVIDED. CONTACT THE METRO DISTRICT FOR THE LOCATION.
3. THE PRIVATE IRRIGATION SYSTEM OWNER SHALL CONTACT THE METRO DISTRICT TO LOCATE THEIR P.O.C. AND REQUISITION THE NUMBER OF WIRES AVAILABLE AT THEIR SITE. ACCOMODATIONS CAN BE MADE IN MANY INSTANCES FOR ADDITIONAL WIRES.
4. THE IRRIGATION INSTALLER SHALL NOTIFY THE METRO DISTRICT TO COORDINATE THE CONNECTION OF THE WIRES TO THE METRO DISTRICT CONTROLLER.

1 NO DETAIL 11/15/2007 N.T.S.

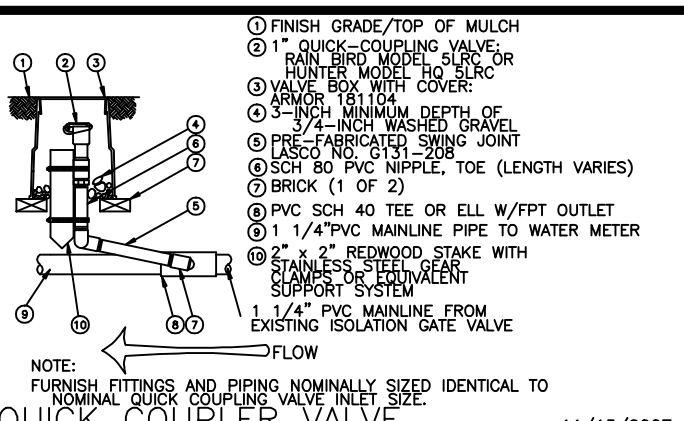

2 QUICK COUPLER VALVE ASSEMBLY 11/15/2007 N.T.S.

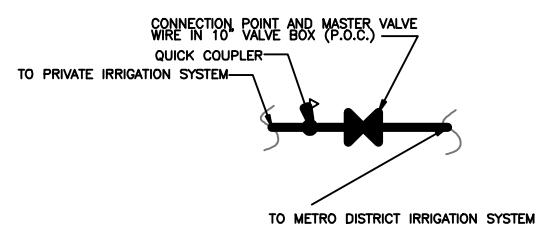

3 CONNECTION ASSEMBLY USING WATER AND CONTROLLER PLAN VIEW 11/15/2007 N.T.S.

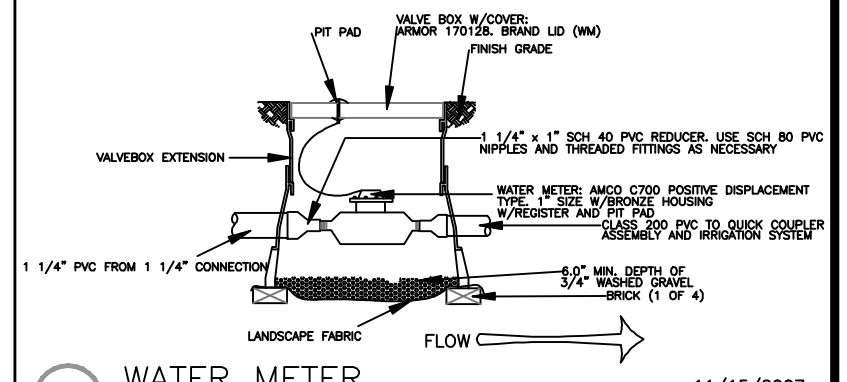

4 WATER METER ASSEMBLY 11/15/2007 N.T.S.

SHEET 1

IRRIGATION P.O.C. DETAILS

THOMPSON CROSSING METRO DISTRICT #2

BRINKER & Landscaping, Inc.

NOTES FOR PRIVATE IRRIGATION SYSTEMS UTILIZING WATER ONLY:

1. ALL PRIVATE IRRIGATION SHALL BE METERED, ACCORDING TO THE ATTACHED DETAIL.
2. THE MAXIMUM FLOW RATE FOR IRRIGATION DESIGN PURPOSES IS 35 GPM, UTILIZING THE 1-1/ 4" P.O.C. PROVIDED. CONTACT THE METRO DISTRICT FOR THE LOCATION.
3. ALL PRIVATE IRRIGATION SYSTEMS UTILIZING ONLY THE WATER (NOT THE CONTROLLER SYSTEM) SHALL INSTALL A HUNTER ICV 151G-FS-AS MASTER VALVE, ACCORDING TO THE DETAIL, FOR USE BY THE METRO DISTRICT.
4. ADDITIONAL WIRES AT THE P.O.C. ARE FOR USE BY THE METRO DISTRICT.

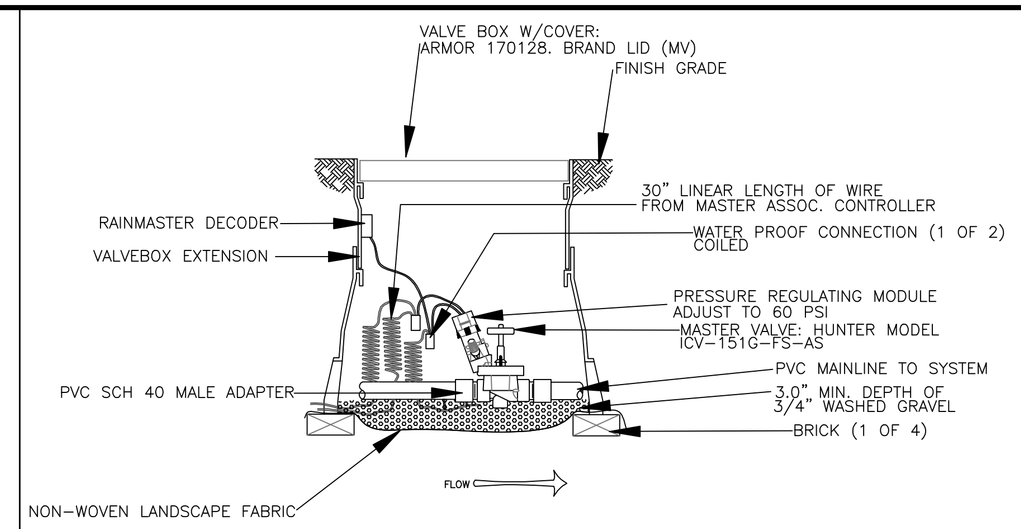

1 MASTER VALVE ASSEMBLY 11/15/2007 N.T.S.

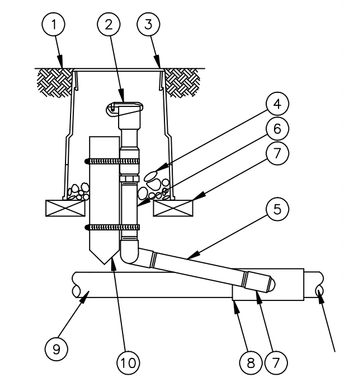

1. FINISH GRADE/TOP OF MULCH
2. 1" QUICK-COUPLING VALVE: RAIN BIRD MODEL 5LRC OR HUNTER MODEL HQ 5LRC
3. VALVE BOX WITH COVER: ARMOR 181104
4. 3-INCH MINIMUM DEPTH OF 3/4-INCH WASHED GRAVEL
5. PRE-FABRICATED SWING JOINT LASCO NO. G131-208
6. SCH 80 PVC NIPPLE, TOE (LENGTH VARIES)
7. BRICK (1 OF 2)
8. PVC SCH 40 TEE OR ELL W/FPT OUTLET
9. 1 1/4"PVC MAINLINE PIPE TO WATER METER
10. 2" x 2" REDWOOD STAKE WITH STAINLESS STEEL GEAR CLAMPS OR EQUIVALENT SUPPORT SYSTEM

1 1/4" PVC MAINLINE FROM EXISTING ISOLATION GATE VALVE

NOTE:
FURNISH FITTINGS AND PIPING NOMINALLY SIZED IDENTICAL TO NOMINAL QUICK COUPLING VALVE INLET SIZE.

2 QUICK COUPLER VALVE ASSEMBLY 11/15/2007 N.T.S.

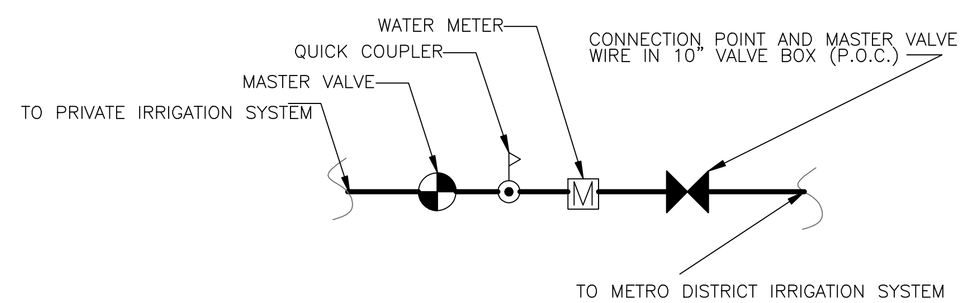

3 PRIVATE CONNECTION ASSEMBLY 11/15/2007 N.T.S.
PLAN VIEW

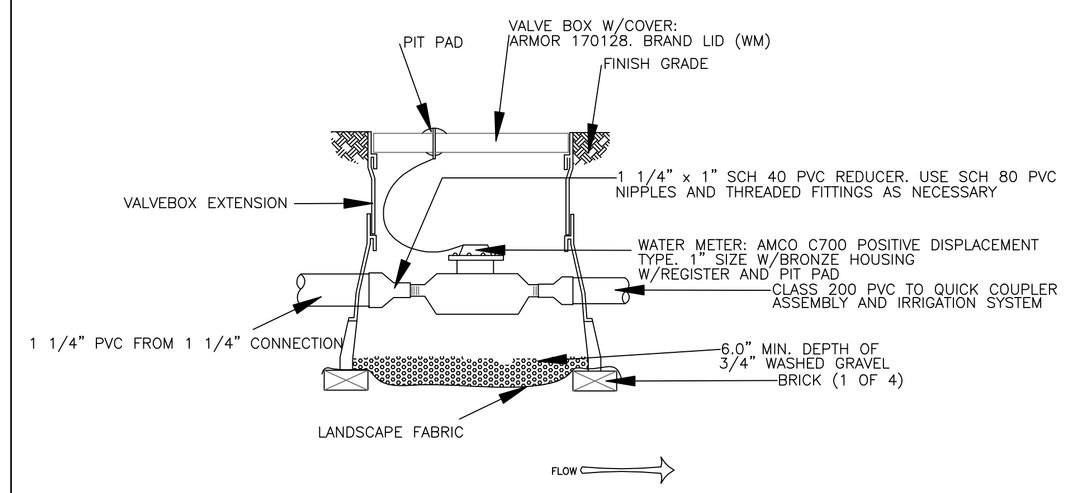

4 WATER METER ASSEMBLY 11/15/2007 N.T.S.

NOTES FOR PRIVATE IRRIGATION SYSTEMS UTILIZING WATER AND METRO DISTRICT CONTROLLER:

1. ALL PRIVATE IRRIGATION SHALL BE METERED, ACCORDING TO THE ATTACHED DETAIL.
2. THE MAXIMUM FLOW RATE FOR IRRIGATION DESIGN PURPOSES IS 35 GPM, UTILIZING THE 1-1/ 4" P.O.C. PROVIDED. CONTACT THE METRO DISTRICT FOR THE LOCATION.
3. THE PRIVATE IRRIGATION SYSTEM OWNER SHALL CONTACT THE METRO DISTRICT TO LOCATE THEIR P.O.C. AND REQUSISTION THE NUMBER OF WIRES AVAILABLE AT THEIR SITE. ACCOMODATIONS CAN BE MADE IN MANY INSTANCES FOR ADDITIONAL WIRES.
4. THE IRRIGATION INSTALLER SHALL NOTIFY THE METRO DISTRICT TO COORDINATE THE CONNECTION OF THE WIRES TO THE METRO DISTRICT CONTROLLER.

1 NO DETAIL 11/15/2007 N.T.S.

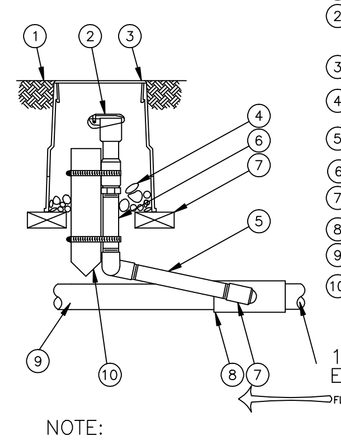

1. FINISH GRADE/TOP OF MULCH
2. 1" QUICK-COUPLING VALVE: RAIN BIRD MODEL 5LRC OR HUNTER MODEL HQ 5LRC
3. VALVE BOX WITH COVER: ARMOR 181104
4. 3-INCH MINIMUM DEPTH OF 3/4-INCH WASHED GRAVEL
5. PRE-FABRICATED SWING JOINT LASCO NO. G131-208
6. SCH 80 PVC NIPPLE, TOE (LENGTH VARIES)
7. BRICK (1 OF 2)
8. PVC SCH 40 TEE OR ELL W/FPT OUTLET
9. 1 1/4"PVC MAINLINE PIPE TO WATER METER
10. 2" x 2" REDWOOD STAKE WITH STAINLESS STEEL GEAR CLAMPS OR EQUIVALENT SUPPORT SYSTEM

1 1/4" PVC MAINLINE FROM EXISTING ISOLATION GATE VALVE

NOTE:
FURNISH FITTINGS AND PIPING NOMINALLY SIZED IDENTICAL TO NOMINAL QUICK COUPLING VALVE INLET SIZE.

2 QUICK COUPLER VALVE ASSEMBLY 11/15/2007 N.T.S.

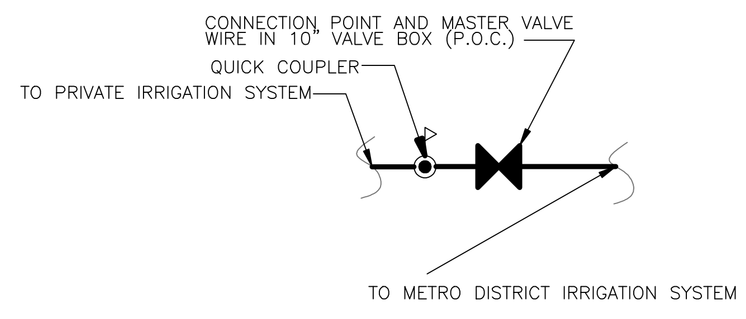

3 CONNECTION ASSEMBLY USING WATER AND CONTROLLER 11/15/2007 N.T.S.
PLAN VIEW

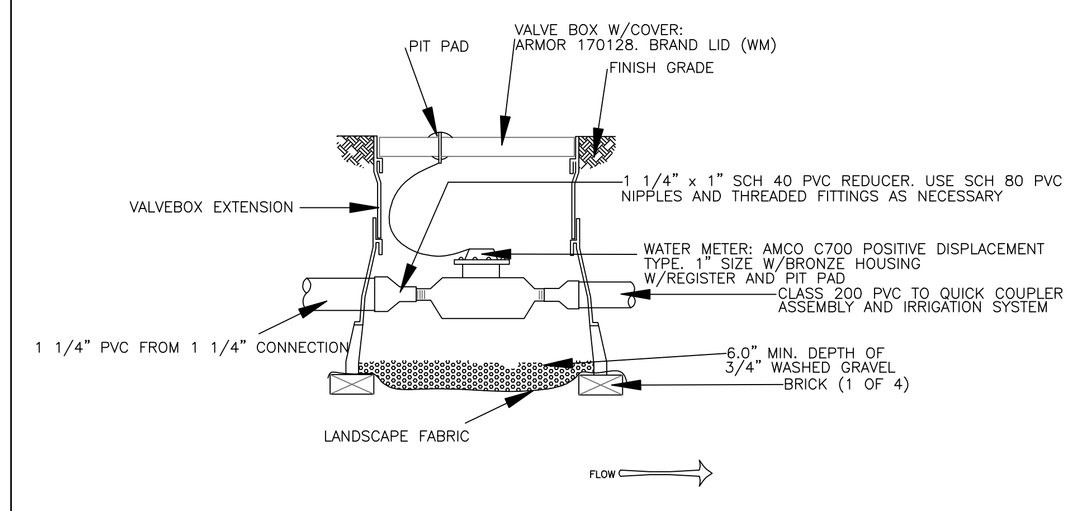

4 WATER METER ASSEMBLY 11/15/2007 N.T.S.

SHEET 1

IRRIGATION_P.O.C. DETAILS

THOMPSON_CROSSING METRO_DISTRICT_#2

Rev #	REVISION #
Date	REVISION DATE
Drwn.	REV. REVISAL BY
Chkd	REVISION CHECKED BY
Remarks	REMARKS

Designed By: JBA
Drawn By: JBA
Chkd By: —
Chan Chkd By: —
Approved By: —
Date: 11/20/2007

BEMIRE Landscaping, Inc.